used for: D-SUB π FILTER

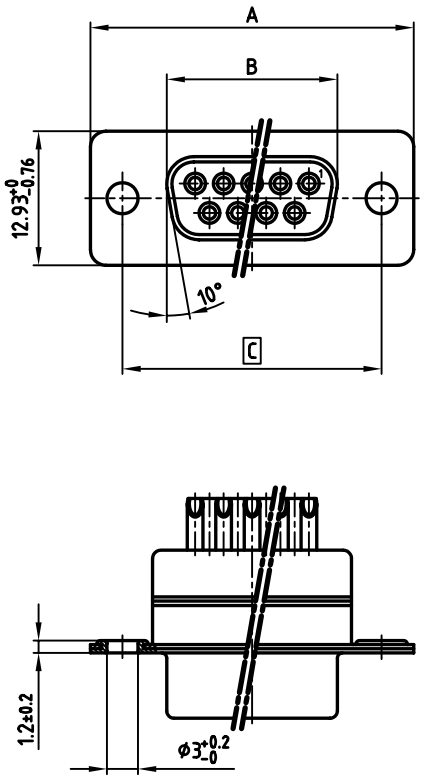

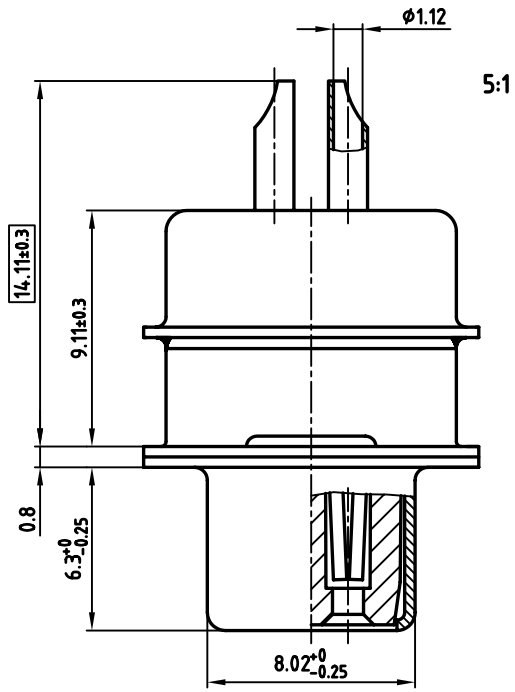

NOTES:

1. METALSHELLS: STEEL; min. 320µ" TIN
2. INSULATORS: PBT GF UL 94 V-0, BLACK
3. CONTACTS: COPPER ALLOY
4. PLATING: min. 8µ" HARD GOLD OVER min. 50µ" NICKEL
   SOLDER CUP ACCEPTS CABLE AWG 20
5. CAPACITANCE: 2 x 1300pF ±20%
6. DIELECTRIC WITHSTANDING VOLTAGE: 424VDC
7. [ ] = CRITICAL DIMENSION: SPC

Part No.	No. of pos.	A -0.76	B -0.25	C
242A29100X	9	31.19	16.46	25.00 +0.12 -0.13
242A29110X	15	39.52	24.79	33.30 +0.15 -0.1
242A29120X	25	53.42	38.50	47.04 ±0.13
242A29130X	37	69.70	54.96	63.50 ±0.13

THIS DRAWING MAY NOT BE COPIED OR REPRODUCED IN ANY WAY, AND MAY NOT BE PASSED ON TO A THIRD PARTY WITHOUT WRITTEN PERMISSION. OWNERSHIP AND COPYRIGHT OF CONEC GmbH

DO NOT ALTER CAD DRAWING BY HAND

CONEC CORPORATION
BRAMPTON, ONTARIO

tolerance

rev.	description	date	name

2001	date	name
drawn	28.08.	Parei
appd.	28.08.	E. Mickenbecker
norm	DIN 41652	
d-old		

scale: 2:1 (5:1)
material: SEE NOTES

title:
D-SUB π FILTER FEMALE
SOLDER CUP 9-37pos.

dwg no: 24K1A158A
AutoCAD 2000 | DIN-A 3 | sh: 1/1

part no: SEE TABLE