DASH NO.	M CODE	MADE FROM

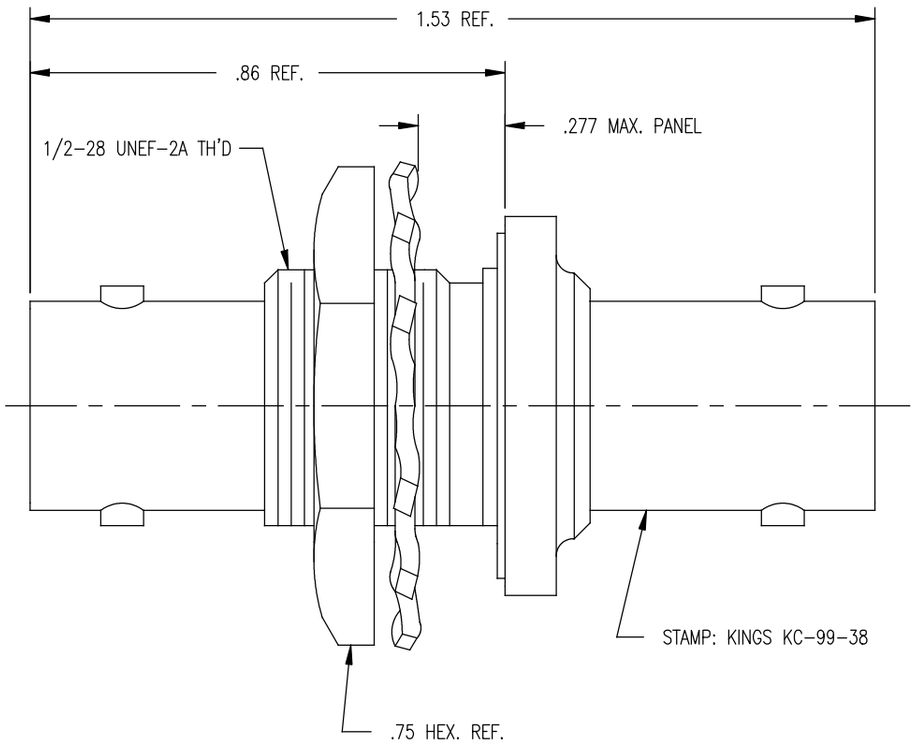

GSD

KC-99-38

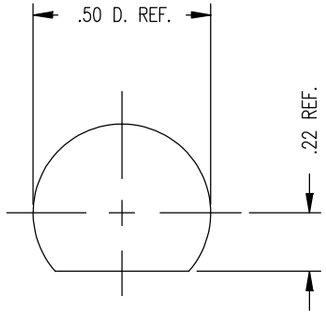

MOUNTING HOLE

NOTES:

1. MATERIALS:
   - INSULATORS–TEFLON, ASTM–D–1457
   - GASKET–SILICONE RUBBER, ZZ–R–765
   - LOCKWASHER–PHOSPHOR BRONZE, QQ–B–750
   - CENTER CONTACTS– BER. COP., ASTM–B–196
   - GLASS SEAL–GLASS TO BE OF SODA LEAD FAMIL
   - ALL OTHER METAL PARTS–BRASS, QQ–B–626
2. FINISHES:
   - OUTER CONTACTS– SILVER PLATE PER QQ–S–365
   - ALL OTHER METAL PARTS–KINGS TARNISH RESISTANT FINISH (TR–5)
3. ELECTRIAL CHARACTERISTICS:
   - NOMINAL IMPEDANCE–50 OHMS
   - FREQUENCY RANGE–DC TO 4 GHZ
   - WORKING VOLTAGE–500 VRMS
4. EVIRONMENTAL:
   - UNIT WILL SHOW NO LEAKAGE AT 50 P.S.I.

GSD

REVISIONS

ISSUE	CHANGES
7	CN 33045 E REDRAWN KH 04/19/91

KAM1078

SCALE 4:1

APPROX SURFACE AREA

USED ON

REF:

ADAPTER, F–F, BULKHEAD, HERMETIC SEAL, BNC

DRAWN	KH	DATE	04/19/91
DESIGN	MJB	DATE	04/19/91
APPR.		DATE	

KINGS
ELECTRONICS CO., INC.
TUCKAHOE, NEW YORK 10707

KC–99–38