NOTICE OF PROPRIETARY RIGHTS
THIS DOCUMENT CONTAINS CONFIDENTIAL TECHNICAL DATA INCLUDING TRADE SECRETS PROPRIETARY TO TIMES MICROWAVE SYSTEMS. DISCLOSURE OF THE DATA IS EXPRESSLY CONDITIONED UPON THE PERSON TO WHOM IT IS ADDRESSED AGREEING TO KEEP YOUR COMPANY ONLY AND OTHER ISSUED PARTIES FROM INFORMATION WITHOUT THE PRIOR WRITTEN CONSENT OF TIMES MICROWAVE SYSTEMS.

| REV. | REVISION DESCRIPTION | DFTM | DATE | APPD | DATE |
|---|---|---|---|---|---|
| A | RELEASED FOR PRODUCTION | M.E. | 03/24/14 | M.E. | 03/24/14 |

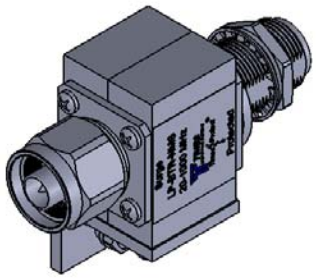

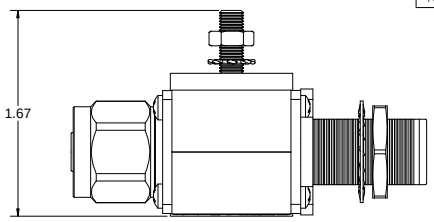


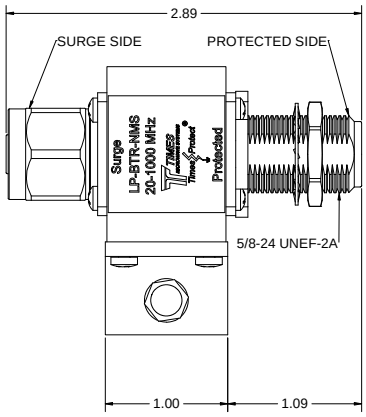


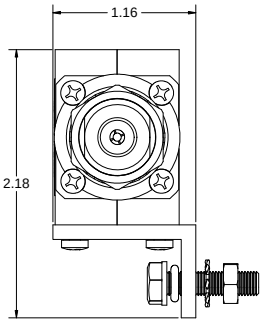


<PARA indent=10>NOTES:

1. ELECTRICAL PERFORMANCE

IMPEDANCE: 50 OHMS
OPERATING FREQUENCY: 20-1000 MHz
VSWR/RETURN LOSS: < 1.1:1 / < -26 dB
INSERTION LOSS: < 0.1 dB
TURN ON VOLTAGE: 600 Vdc +/- 20%
TURN ON TIME: 2.5 ns for 2 kV/ns
MAX SURGE CURRENT: 10 kA MULTIPLE (8/20 us WAVE-FORM)
ENERGY THROUGHPUT RATING: < 200 uJ (4kV/2kA 1.2X50/8X20 us WAVE-FORM)
POWER HANDLING AT FREQUENCY: 375 W (20-220 MHz)
125 W (220-700 MHz)
50 W (700-1000 MHz)
PROTECTION CIRCUIT: DC BLOCKED

2. ENVIRONMENTAL CHARACTERISTICS

TEMPERATURE RANGE STORAGE/OPERATING: -40C TO +85C/-40C TO +50C
WEATHERIZATION: REQUIRED FOR EXTERNAL USE
VIBRATION: MIL-STD 202, METHOD 204, CONDITION B
RoHS COMPLIANT

3. MATERIAL AND FINISH

INNER CONNECTOR FEMALE: PHOSPHOR BRONZE, SILVER PLATE
INNER CONNECTOR MALE: BRASS, SILVER PLATE
BODY: BRASS, WHITE BRONZE PLATE
OUTER CONDUCTOR: BRASS, WHITE BRONZE PLATE
COUPLING NUT: BRASS, WHITE BRONZE PLATE
INSULATOR: PTFE

MATERIAL:

USED ON ASSY.

| | | |
|---|---|---|
| DRAFTSMAN | M. ELLIS | 03/24/14 |
| CHECKER | M. ELLIS | 03/24/14 |
| APPROVED | M. ELLIS | 03/24/14 |

UNLESS OTHERWISE SPECIFIED
ALL DIMENSIONS ARE IN INCHES
MACHINED SURFACES FINISH 32 RMS MAX.
REMOVE ALL BURRS .005 MAX. BREAK
MACHINE CORNERS .005 MAX. FILLET R.
TOLERANCES ON DECIMALS
.XX ± .01 .XXX ± .005
ANGLES ± 1° FRACTIONS ± 1/32

DO NOT SCALE DRAWING

TIMES MICROWAVE SYSTEMS

TITLE: SURGE PROTECTOR
N MALE TO N FEMALE
20-1000 MHz

| | | | |
|---|---|---|---|
| DWG-SIZE C | DRWG. NO. LP-BTR-NMS | | REV. A |
| CODE IDENT. 60999 | SCALE: 2:1 | SHEET 1 OF 1 | |