NOTICE OF PROPRIETARY RIGHTS
THIS DOCUMENT CONTAINS CONFIDENTIAL TECHNICAL DATA INCLUDING TRADE SECRETS PROPRIETARY TO TIMES MICROWAVE SYSTEMS. DISCLOSURE OF THE DATA IS EXPRESSLY CONDITIONED UPON THE PERSON TO WHOM IT IS ADDRESSED AGREEING TO KEEP YOUR COMPANY ONLY AND OTHER ISSUED THEREOF INFORMATION WITHOUT THE PRIOR WRITTEN CONSENT OF TIMES MICROWAVE SYSTEMS.

REV.	REVISION DESCRIPTION	DFTM	DATE	APPD	DATE
A	RELEASED FOR PRODUCTION	M.E.	03/24/14	M.E.	03/24/14

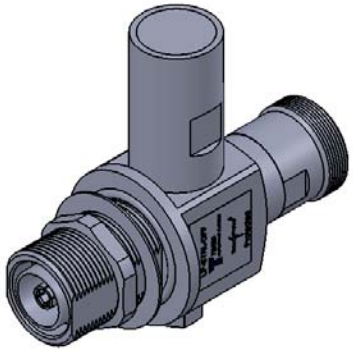

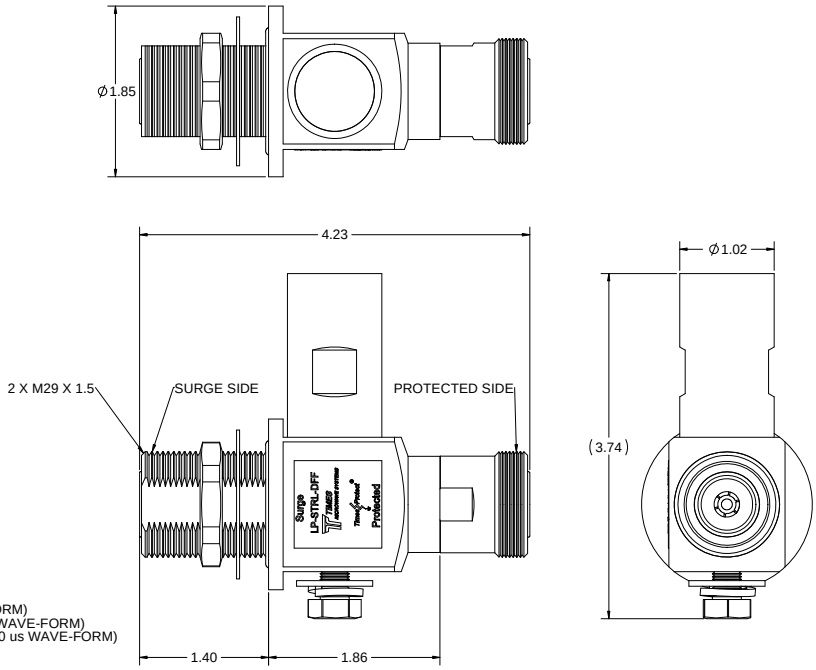

NOTES:

1. ELECTRICAL PERFORMANCE

   IMPEDANCE: 50 OHMS
   OPERATING FREQUENCY: 680-2200 MHz
   VSWR/RETURN LOSS: < 1.13:1 / < -24 dB (680-700 MHz)
   < 1.1:1 / < -26 dB (700-2200 MHz)
   INSERTION LOSS: < 0.1 dB
   AVERAGE POWER: 700 W
   PIM: < -160 dBc
   MAX SURGE CURRENT: 50 kA (8/20 us WAVE-FORM)
   RESIDUAL PULSE VOLTAGE: < 100 V (50kA 8/20 us WAVE-FORM)
   RESIDUAL PULSE VOLATGE: < 1 V (4kV/2kA 1.2X50/8X20 us WAVE-FORM)
   ENERGY THROUGHPUT RATING: < 1 nJ (4kV/2kA 1.2X50/8X20 us WAVE-FORM)
   PROTECTION CIRCUIT: DC BLOCKED

2. ENVIRONMENTAL CHARACTERISTICS

   STORAGE/OPERATING TEMPERATURE: -40C TO +85C
   WEATHERIZATION: IP67
   VIBRATION: MIL-STD 202, METHOD 204, CONDITION B
   WEIGHT: 1.32 lb / 0.6 kg
   RoHS COMPLIANT

3. MATERIAL AND FINISH

   INNER CONNECTOR FEMALE: PHOSPHOR BRONZE, SILVER PLATE
   BODY: BRASS, WHITE BRONZE PLATE
   COUPLING NUT: BRASS, WHITE BRONZE PLATE
   INSULATOR: PTFE
   O-RING: SILICONE RUBBER

MATERIAL:

USED ON ASSY.

DRAFTSMAN	M. ELLIS	03/24/14
CHECKER	M. ELLIS	03/24/14
APPROVED	M. ELLIS	03/24/14

UNLESS OTHERWISE SPECIFIED
ALL DIMENSIONS ARE IN INCHES
MACHINED SURFACES FINISH 32 RMS MAX.
REMOVE ALL BURRS .005 MAX. BREAK
MACHINE CORNERS .005 MAX. FILLET R.
TOLERANCES ON DECIMALS
.XX ± .01 .XXX ± .005
ANGLES ± 1° FRACTIONS ± 1/32

DO NOT SCALE DRAWING

TIMES MICROWAVE SYSTEMS

TITLE: SURGE PROTECTOR
DIN FEMALE TO DIN FEMALE
680-2200 MHz

DWG-SIZE: C
DRWG. NO.: LP-STRL-DFF
REV.: A
CODE IDENT.: 60999 00777
SCALE: 1.5:1
SHEET 1 OF 1