PRODUCT REFERENCE SHEET

Feed-thru Entry Panels

EP-1650

© 2005

1579 PR A

PRODUCT DESCRIPTION

Aluminum Feed-thru Entry Panels enable multiple coax runs to enter buildings and shelters. The entry panel supports coax at the entry point and prevents moisture from entering the building. Feed-thru entry panels feature 4” (101.6mm) or 5” (127mm) openings to accept 4” (101.6mm) or 5” (127mm) boot assemblies. They can be used in both interior and exterior wall mounting applications. Each feed-thru entry panel includes #14 stainless steel screws, finishing washers, plastic anchors, and entry port caps. Feed-thru entry panels are manufactured from .080” (2.0mm) aluminum and are powder coated to ensure long term integrity and provide appealing aesthetics.

TYPICAL APPLICATIONS

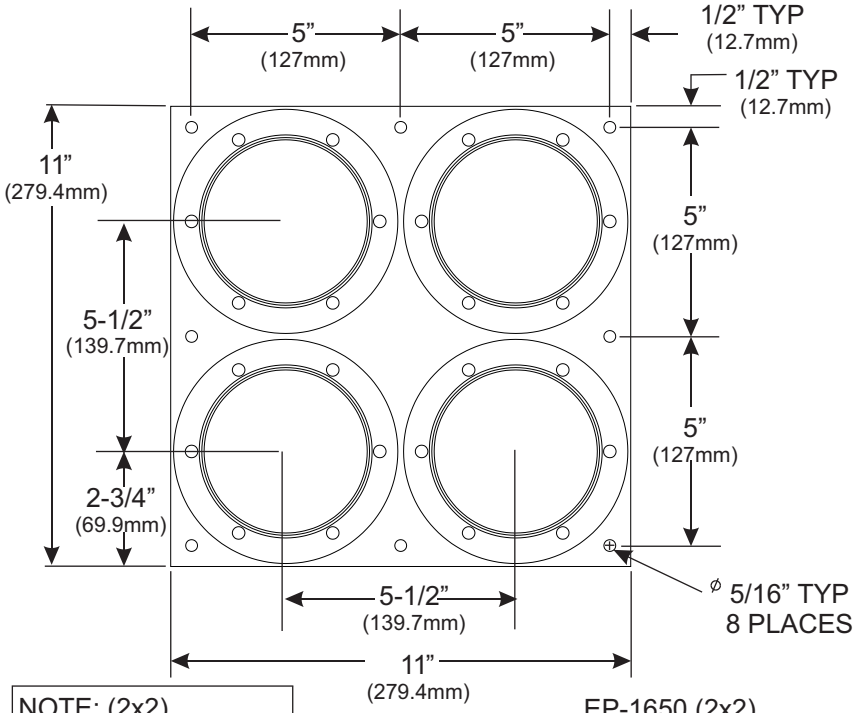

NOTE: (2x2)
(2) Rows of
(2) 4” (101.6mm) port housings

EP-1650 (2x2)
4” (101.6mm) FEED-THRU ENTRY PANEL
(Shown)

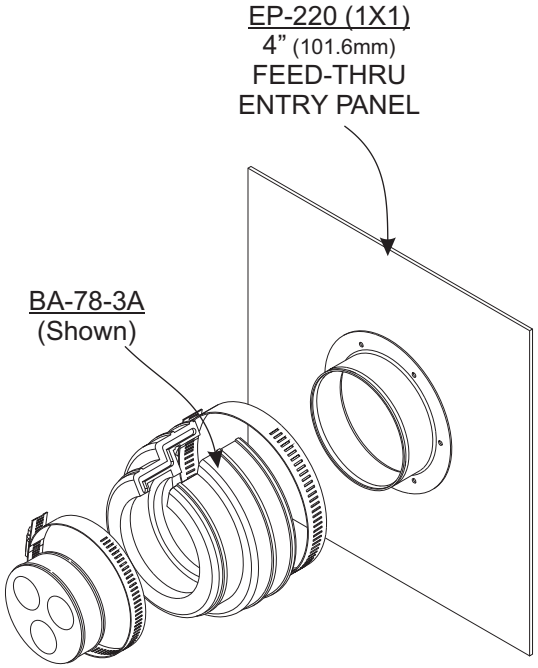

SPECIFICATIONS

Finish:

Entry panels are manufactured from .080” aluminum and are powder coated.
All attachment hardware is stainless steel.

4" FEED-THRU ENTRY PANEL					
Part #	Description	Wall Opening Size		Weight lbs. (kg)	Qty.
		Width	Height		
EP-1650	4" (101.6mm) Entry Panel, 4 Port, 2X2	9-1/2" (241.3mm)	9-1/2" (241.3mm)	4.0 (1.8)	Each

TIMES MICROWAVE SYSTEMS
A smiths COMPANY

World Headquarters: 358 Hall Avenue, Wallingford, CT 06492 • 203-949-8400, 1-800-867-2629 FAX: 203-949-8423
International Sales: 4 School Brae, Dysart, Kirkcaldy, Fife, Scotland KY1 2XB UK • +44(0)1592655428 FAX: +44(0)1592653162
China Sales: Unit A, Floor 14, East Ocean Center, No. 618 Yan'an Road East, Shanghai, China 200001
TEL: 86-21-53854500/53854501 FAX: 86-21-53854506
www.timesmicrowave.com
© 2005, Times Microwave Systems, Wallingford, CT 06492