used for: D-SUB FILTER

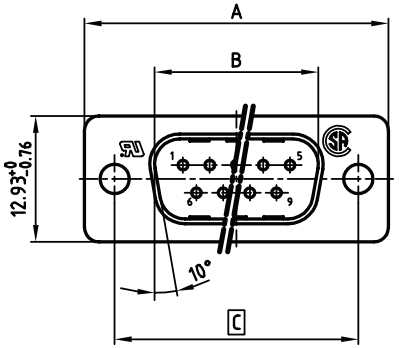

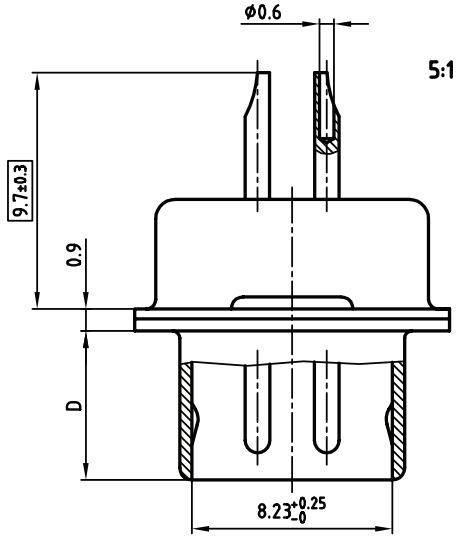

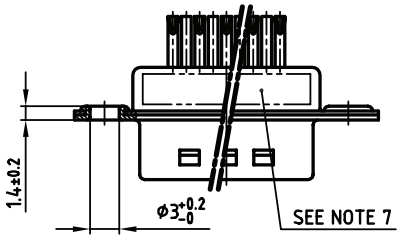

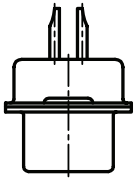

NOTES:

1. METALSHELLS: STEEL; min. 320µ" TIN
2. INSULATORS: PBT GF UL 94 V-0, BLACK
3. CONTACTS: COPPER ALLOY
4. PLATING: min. 8µ" HARD GOLD OVER min. 50µ" NICKEL
5. SOLDER CUP ACCEPTS CABLE AWG 26
6. CAPACITANCE: 830pF ±20%
7. CONNECTOR IS PART MARKED: PART-NO. CONEC Y/WW
8. [ ] = CRITICAL DIMENSION

POS.	A -0.76	B +0.25	C	D -0.3	Part NO.
9	31.19	16.79	25.00 +0.12 -0.13	6.12	**241A11680X**
15	39.52	25.12	33.30 +0.15 -0.1	6.12	**241A11690X**
25	53.42	38.84	47.04 ±0.13	5.99	**241A11700X**
37	69.70	55.30	63.50 ±0.13	5.99	**241A11710X**

THIS DRAWING MAY NOT BE COPIED OR REPRODUCED IN ANY WAY, AND MAY NOT BE PASSED ON TO A THIRD PARTY WITHOUT WRITTEN PERMISSION. OWNERSHIP AND COPYRIGHT OF CONEC GmbH
DO NOT ALTER CAD DRAWING BY HAND

rev.	description	date	name

tolerance

2002	date	name
drawn	26.03.	Parei
appd.	26.03.	E. Mickenbecker
norm	DIN 41652	
d-old		

CONEC®

scale: 2:1 (5:1)
material: SEE NOTES

title:
D-SUB FILTER MALE
9-37pos. SOLDER CUP

dwg no: 24K1A229
AutoCAD 2000 | DIN-A 3 | sh: 1/1

part no: SEE TABLE