used for: D-SUB π FILTER

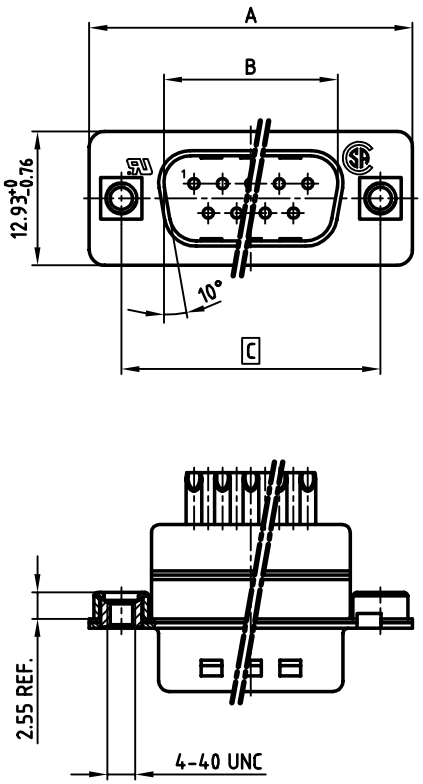


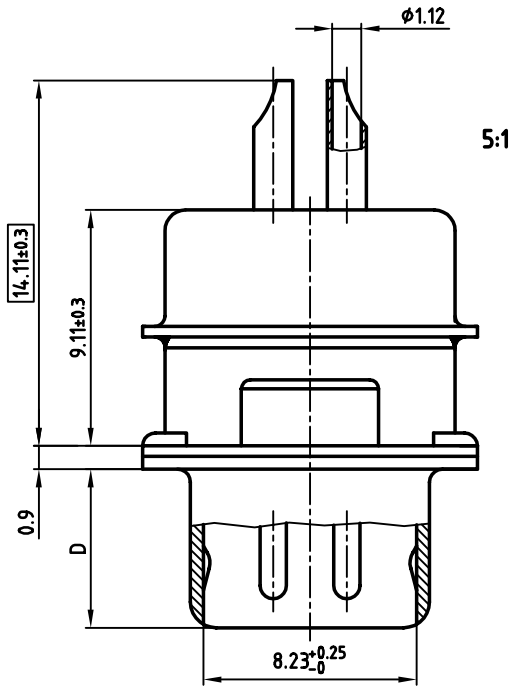


**NOTES:**

1. METALSHELLS: STEEL; min. 320µ" TIN
2. INSULATORS: PBT GF UL 94 V-0, BLACK
3. CONTACTS: COPPER ALLOY
4. PLATING: min. 8µ" HARD GOLD OVER min. 50µ" NICKEL
   SOLDER CUP ACCEPTS CABLE AWG 20
5. THREADED INSERT: COPPER ALLOY; min. 200µ" TIN over 80µ" NICKEL
6. COLLAR: COPPER ALLOY; min. 200µ" TIN over 80µ" NICKEL
7. CAPACITANCE: 2 x 1300pF ±20%
8. DIELECTRIC WITHSTANDING VOLTAGE: 424VDC
9. MAXIMUM TORQUE VALUE FOR THREAD: 6" LBS
10. [ ] = CRITICAL DIMENSION: SPC

| No. of pos. | A -0.76 | B +0.25 | C | D -0.3 | Part No. |
|---|---|---|---|---|---|
| 9 | 31.19 | 16.79 | 25.00 +0.12 −0.13 | 6.12 | **241A29360X** |
| 15 | 39.52 | 25.12 | 33.30 +0.15 −0.1 | 6.12 | **241A29370X** |
| 25 | 53.42 | 38.84 | 47.04 ±0.13 | 5.99 | **241A29380X** |
| 37 | 69.70 | 55.30 | 63.50 ±0.13 | 5.99 | **241A29390X** |

THIS DRAWING MAY NOT BE COPIED OR REPRODUCED IN ANY WAY, AND MAY NOT BE PASSED ON TO A THIRD PARTY WITHOUT WRITTEN PERMISSION. OWNERSHIP AND COPYRIGHT OF CONEC GmbH
DO NOT ALTER CAD DRAWING BY HAND

CONEC CORPORATION
BRAMPTON, ONTARIO

tolerance

| rev. | description | date | name |
|---|---|---|---|

| | date | name |
|---|---|---|
| 2001 | | |
| drawn | 29.03. | Parei |
| appd. | 29.03. | E. Mickenbecker |
| norm | DIN 41652 | |
| d-old | | |

scale: 2:1 (5:1)
material: SEE NOTES

title:
**D-SUB π FILTER MALE**
SOLDER CUP 9-37pos.
with threaded insert

dwg no: **24K1A103A**
AutoCAD 2000 | DIN-A 3 | sh: 1/1

part no: **SEE TABLE**