used for: D-SUB FILTER

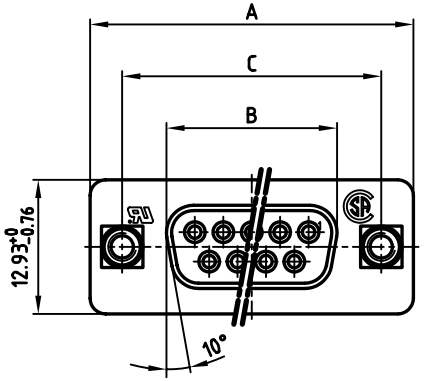

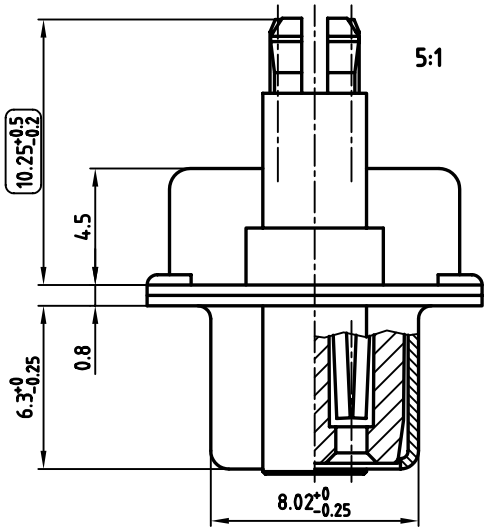

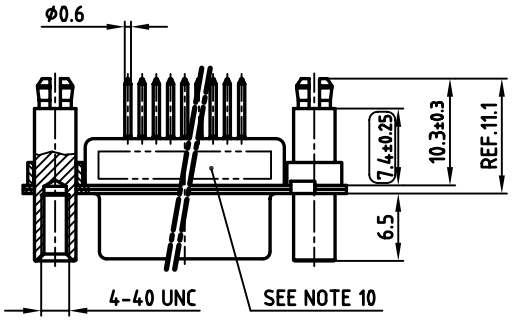

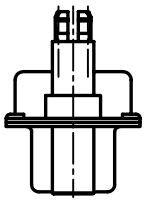

NOTES:

1. METALSHELLS: STEEL; min. 320µ" TIN
2. INSULATORS: PBT GF UL 94 V-0, BLACK
3. CONTACTS: COPPER ALLOY
   PLATING: 8µ" HARD GOLD OVER min. 50µ" NICKEL
4. THREADED LOCK/SPACER CLIP: COPPER ALLOY; min. 200µ" TIN over 80µ" NICKEL
   PCB-HOLE: Ø3.1±0.1; PCB THICKNESS 1.6mm
5. COLLAR: COPPER ALLOY; min. 200µ" TIN over 80µ" NICKEL
6. P.C.B. HOLE DRILLINGS ON DRAWING NO.: 16K1IIUA
7. CAPACITANCE: 1300pF ±20%
8. DIELECTRIC WITHSTANDING VOLTAGE: 424 VDC
9. MAXIMUM TORQUE VALUE FOR THREAD: 6" LBS
10. CONNECTOR IS PART MARKED: PART-NO. CONEC Y/WW
11. ( ) = CHECK DIMENSION

Directive 2002/95/EC „RoHS" Compliant

POS.	A -0.76	B -0.25	C	PART NO.
9	31.19	16.46	25.00 +0.12 -0.13	242A15330X
15	39.52	24.79	33.30 +0.15 -0.1	242A15340X
25	53.42	38.50	47.04 ±0.13	242A15350X
37	69.70	54.96	63.50 ±0.13	242A15360X

APPROVAL # FREIGABE # DEBLOCAGE # AUTOR/ZACION # APPROVAL

CUSTOMER APPROVAL DATE:

NAME: TITLE:

COMPANY NAME:

THIS DRAWING MAY NOT BE COPIED OR REPRODUCED IN ANY WAY, AND MAY NOT BE PASSED ON TO A THIRD PARTY WITHOUT WRITTEN PERMISSION. OWNERSHIP AND COPYRIGHT OF CONEC GmbH

DO NOT ALTER CAD DRAWING BY HAND

rev.	description	date	name

tolerance

dim. in mm

2003	date	name
drawn	12.06.	Lehmenkühler
appd.	12.06.	Kühle
norm	DIN 41652	
d-old		

CONEC®

scale: 2:1 (5:1)

material: SEE NOTES

title:

D-SUB FILTER FEMALE

9-37pos. SOLDER PIN STRAIGHT
with threaded lock and spacer clip

dwg no: AutoCAD2000 DIN-A 3

24K1A396 sh: 1/1

part no: SEE TABLE