www.yeonhab.co.kr webmaster@yeonhab.co.kr

YH series

38999 I,III,IV Style Connector

ISO 9001 / ISO14001

Rev No. 1

연합정밀주식회사

YEONHAB PRECISION CO., LTD.

Introduction	개요 (Overview)	3
	기술적 정보 (Technical Data)	4
	재질 (Material)	5
	접점사양 (Contact Part)	6
	장비 (Tool)	7
	키정렬 (Polarizing Position)	8
	Insert Availability & Identification	9
	MIL-DTL-38999 Series Style 접점 배열도 (Contact Arrangements)	10

38999 Series Style	38999 Series I Style 품명구성 (Ordering Information)	13
	Wall Mounting Receptacle (YH27466)	14
	Straight Plug (EMI) (YH27467)	15
	Jam Nut Receptacle (YH27468)	16
	Wall Mounting Receptacle (Back Panel) (YH27656)	17
	Plug Protectoin Cap (YH27501)	18
	Receptacle Protection Cap (YH27502)	19

38999 Series III Style	품명구성 (Ordering Information)	20
	Jam Nut Receptacle (YH38999/24)	21
	Square Flange Receptacle (YH38999/20)	22
	Straight Plug (EMI) (YH38999/26)	23
	Plug Protection Cap (YH38999/32)	24
	Receptacle Protection Cap (YH38999/33)	25

38999 Series IV Style	품명구성 (Ordering Information)	26
	Wall Mounting Receptacle (YH38999/40)	27
	Box Mount Receptacle (YH38999/42)	28
	Jam Nut Receptacle (YH38999/44)	29
	Straight Plug (EMI) (YH38999/46)	30
	In-Line Receptacle (YH38999/49)	31

개요 (Overview)

38999 Series Style Connector는 3가지 분류로 나누어 각각의 특성이 있습니다. 고신뢰의 전기, 기계 및 환경적 특성이 요구되는 우주 항공장비 및 특수 통신장비 등에 주로 사용되는 커넥터입니다. 당사는 축적된 기술을 바탕으로 미국의 커넥터 전문제작 회사인 THE AERO-ELECTRIC CONNECTOR COMPANY INC.와 기술제휴를 맺어 한국에서 독점생산, 그 동안 수입에만 의존했던 한국시장에 저렴하고 높은 품질의 커넥터를 공급하고 있습니다.

38999 Series Style Connector can be divided into 3 distinctive classes which have individual characteristics. This connector is primarily used in equipment that require great reliability in electrical, mechanical, and environmental characteristics such as Space and Aviation Equipment, and special communications tools. This product was developed based on our company's know-how of technical skills and with the technology co-operation agreement with The Aero-Electric Connector Company, Inc., an expert in connector manufacturing based in Connecticut, USA. This has enabled us exclusive production in Korea and also provide the domestic market independency from import only and as a result can supply high quality products at low costs to the Korean market.

YH series

38999 Series I, III, IV Style Connector

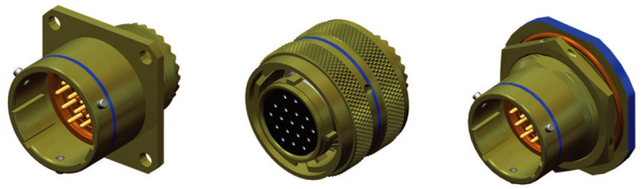

기술적 정보 (Technical data)

Characteristic

- Corrosion-resistant shells of aluminium alloy with cadmium over nickel plating withstand a 500 hours salt spray exposure
- Rear release crimp snap-in contacts
- Hight contact density
- Standard MIL-C-39029 contacts, MIL-I-81969 application tools and MIL-STD-1560 insert arrangements
- Special/custom capabilities
- 100% Scoop-proof - Series I, III and IV
- Operated under severe high temperature vibration testing through 200℃ - engineered for high density circuitry - Series III, IV
- Interfacial seal helps prevent electrolytic erosion of contacts - Series III, IV
- Superior EMI shielding provides outstanding protection up to 65dB at 10 GHz. - Series III, IV

Specification Comparison

Design	Series I	Series III	Series IV
Low profile/Light Weight	no	no	no
Scoop proof	yes	yes	yes
Coupling System	Bayonet	Triple Lead Thread	breech
Electrolytic Erosion	no	yes	yes
Durability(Cycles)	500	500	500
High Impact Shock	yes	yes	yes
External Bending Moment Shell Size 25	650 in/lbs	1000 in/lbs	650 in/lbs
Random Vibration "J"	Ambient	492℉	492℉
Sine Vibration	30G, Ambient	60G, -65℃ to +200℃	60G, -65℃ to +200℃
Sand, Dust, Ice	yes	yes	yes
Shell Size	9-25	9-25	11-25

Contact Rating

Contact Size	Test Current DC Test Ampererage	Maximum Millivolt Drop*	Crimp Well Date	
			Well Diameter	Well Depth
22D	5	40	0.876 ±0.025	3.988/3.581
22M **	3	30	0.711 ±0.025	3.988/3.581
22 **	5	40	0.927 ±0.025	3.988/3.581
20	7.5	35	1.194 ±0.025	5.817/5.309
16	13	25	1.702 ±0.025	5.817/5.309
12	23	25	2.540 ±0.051	5.817/5.309

* Maximum millivolt drop data is determined by measuring resistance of mated contacts from end to en

** For reference only

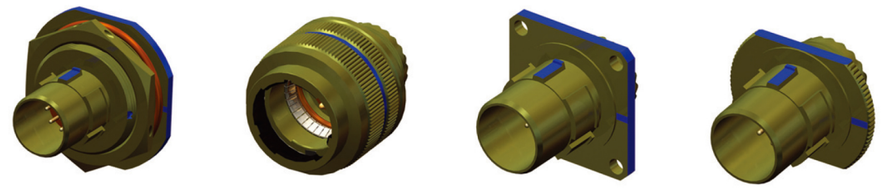

재질 (Material)

Performance and Material Specification

Materials and Finishes

	Receptacle	Grounded Plug
Shell	Aluminum alloy	Aluminum alloy*
Insulator	High grade plastic	High grade plastic
Contacts	Copper alloy, gold plate	Copper alloy, gold plate
Grommet and Seal	Silicone bass elastomer	Silicone bass elastomer
Jam Nut	Aluminum alloy	-
Coupling	-	Aluminum alloy
Grounding Spring	-	Beryllium copper

* Finish as noted in how to order sections.

Electrical Data

Contact Rating and Wire Size Accommodation							
Wire Size	Contact Size and Test Amps						
	22D	22M*	22*	20	16	12	10
28	1.5	1.5	-	-	-	-	-
26	2.0	2.0	2.0	-	-	-	-
24	3.0	3.0	3.0	3.0	-	-	-
22	5.0	-	5.0	5.0	-	-	-
20	-	-	-	7.5	7.5	-	-
18	-	-	-	-	10.0	-	-
16	-	-	-	-	13.0	-	-
14	-	-	-	-	-	17.0	-
12	-	-	-	-	-	23.0	-
10	-	-	-	-	-	23.0	33.0

* For reference only

Service Rating								
Altitude	Service Rating M		Service Rating N		Service Rating I		Service Rating II	
	Mated	Unmated	Mated	Unmated	Mated	Unmated	Mated	Unmated
Sea Level	1300	1300	1000	1000	1800	1800	2300	2300
50,000 ft.	800	550	600	400	1000	600	1000	800
70,000 ft.	800	350	600	260	1000	400	1000	500
100,000 ft.	800	200	600	200	1000	200	1000	200

Test voltage, AC(rms)

Test Data

Test Description	Parameters
Durability	500 cycles of mating and unmating
Temperature Range	Class A : -65℃(-85℉) to +150℃(+302℉) Class F : -65℃(-85℉) to +200℃(+392℉) Class W : -65℃(-85℉) to +175℃(+347℉)
Vibration	Mated connectors are vibrated with weights to simulate rear accessory loads to the following levels : Sine Vibration : Up to 60 G's - Series I, III & IV (at rated temperature - Series III, IV) Random Vibration : 43.7 Grms at Rated Temperature - Series III, IV 49.5 Grms at Ambient Temperature - Series I, III & IV
EMI Shielding Effectiveness	Class F : EMI leakage attenuation, greater than 90dB at 100Mhz, greater than 65dB at 10Ghz. Shell to shell conductivity, 1.0 millivolt max. resistance. Class W : EMI leakage attenuation, greater than 90dB at 100Mhz, greater than 50dB at 10Ghz. Shell to shell conductivity, 2.5 millivolt max.
Corrosion Resistant	Class A, F : withstand 48 hours salt spray. Class W : withstand 500 hours salt spray.
Fluid Immersion	Connectors are fluid resistant to many fuels, solvents, coolants and oils.
High Impact Shock	Mated conectors terminated with MIL-C-915 cable and environmentally sealed backshells will withstand high impact shock per MIL-S-901. Applicable to Series I, III & IV only.
Altitude	Designed to operate between sea level and 100,000 ft. above sea level.

NOTE : For hermetic standard or test data please consult YEONHAB.

YH series

38999 Series I, III, IV Style Connector

접점사양 (Contact Part)

Contact Part Number Cross Reference

Contact Style	Contact Size	Military Part Number
PIN	22D	M39029/58-360
	22M	M39029/58-361
	22	M39029/58-362
	20	M39029/58-363
	16	M39029/58-364
	12	M39029/58-365
	10	M39029/58-528
	12 COAX	M39029/28-211*
	8 TWINAX	M39029/90-529**
	8 COAX***	M39029/60-367
SOCKET	22D	M39029/56-348
	22M	M39029/56-349
	22	M39029/56-350
	20	M39029/56-351
	16	M39029/56-352
	12	M39029/56-353
	10	M39029/56-527
	12 COAX	M39029/75-416*
	8 TWINAX	M39029/91-530**
	8 COAX***	M39029/59-366

* Recommended use with RG174, RG179 and RG316 cable.

** Recommended use with M17/176-00002 cable.

*** For use with RG180B/U and RG195A/U cable.

Seal Plugs

Size	Military Part Number
22D, 22M, 22	M27488-22
20	M27488-20
16	M27488-16
12	M27488-12

Wire Sizes and Dimensions

Contact Size	Wire Size (AWG)	Finished wire outside dimensions	
		Minimum	Maximum
22D	28, 26, 24, 22	0.762	1.372
22M*	28, 26, 24	0.762	1.270
22*	26, 24, 22	0.864	1.524
20	24, 22, 20	1.016	2.108
16	20, 18, 16	1.651	2.769
12	14, 12	2.464	3.607
12 COAX	RG-174, 179, 316	2.388	2.591
8 TWINAX	M17/95-RG-180	3.454	3.708
8 COAX	M17/176-00002	3.150	3.404

* Recommended use with RG174, RG179 and RG316 cable.

Wire Stripping

strip insulation from end of wire to be crimped.
(see table for proper stripping dimension.)
Do not cut or damage wire strands.

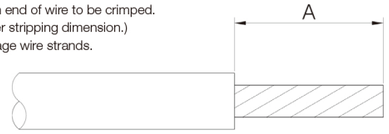

Wire SIze	A
22D OR 22M*	3.18
20	4.77
16	4.77
12	4.77

* For reference only

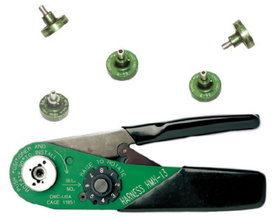

장비 (Tools)

Tools - Crimp

Contact Size	Pin Contact Series I, III, IV		Socket Contact Series I, III, IV	
	Crimp Tool Part Number	Locator or Turret Part Number	Crimp Tool Part Number	Locator or Turret Part Number
22D or 22M*	M22520/2-01	M22520/2-09	M22520/2-01	M22520/2-07
22*	M22520/2-01	M22520/2-09	M22520/2-01	M22520/2-07
20	M22520/1-01	M22520/1-04 OR TH 187	M22520/1-01	M22520/1-04
16	M22520/1-01	M22520/1-04 OR TH 187	M22520/1-01	M22520/1-04
12	M22520/1-01	M22520/1-04	M22520/1-01	M22520/1-04
8 Coax Inner Conductor	Crimp Tool	Crimp Tool Locator	Crimp Tool	Crimp Tool Locator
RG-180	M22520/2-01	995-002-268-268	M22520/2-501	M22520/2-5-39B
RG-174, 179, 310	M22520/2-01	995-002-268-268	M22520/2-501	M22520/2-5-37B
RG-142	M22520/2-01	995-002-268-268	M22520/2-501	M22520/2-5-19B
12 Coax Inner Conductor	Crimp Tool	Crimp Tool Locator	Crimp Tool	Crimp Tool Locator
RG-174, 316	M22520/2-01	M22520/2-34	M22520/31-01	M22520/31-02
8 Twinax	Crimp Tool	Crimp Tool Locator		
Center Contact	M22520/2-01	M22520/2-37		
Intermediate Contact	M22520/5-01	M22520/5-200		
Outer Contact	M22520/5-01	M22520/5-200		

* For reference only

Insertion Tools

Plastic Tool

Contact Size	MS Part Number	Color Code
22D, 22M*	M81969/14-01	Green/(White)
22	M81969/14-09	Brown/(White)
20	M81969/14-10	Red/(Orange)
16	M81969/14-03	Blue/(White)
12	M81969/14-04	Yellow/(White)
10 (Power)	M81969/14-05	Gray/White
12 Coax	M81969/14-04	Yellow/(White)
8 Coax	-	-
8 Twinax	-	-

* For reference only

Metal Tool (Angle Type)

Contact Size	MS Part Number	Color Code
22D, 22M*	M81969/8-01	Black
22	M81969/8-03	Brown
20	M81969/8-05	Red
16	M81969/8-07	Blue
12	M81969/8-09	Yellow
10 (Power)	M81969/8-11	Green
12 Coax	M81969/8-09	Yellow
8 Coax	-	-
8 Twinax	M81969/46-06	Red

* For reference only

Removal Tools

Plastic Tool

Contact Size	MS Part Number	Color Code
22D, 22M*	M81969/14-01	Green/(White)
22	M81969/14-09	Brown/(White)
20	M81969/14-10	Red/(Orange)
16	M81969/14-03	Blue/(White)
12	M81969/14-04	Yellow/(White)
10 (Power)	M81969/14-05	Gray/White
12 Coax	M81969/14-04	Yellow/(White)
8 Coax	M81969/14-12	Green
8 Twinax	M81969/14-12	Green

* For reference only

Metal Tool (Angle Type)

Contact Size	MS Part Number	Color Code
22D, 22M*	M81969/8-02	Green/White
22	M81969/8-04	Yellow/White
20	M81969/8-06	Blue/White
16	M81969/8-08	Red/White
12	M81969/8-10	Brown/White
10 (Power)	M81969/8-12	Green/White
12 Coax	M81969/8-10	Brown/White
8 Coax	-	N/A
8 Twinax	M81969/46-12	N/A

* For reference only

YH series

38999 Series I, III, IV Style Connector

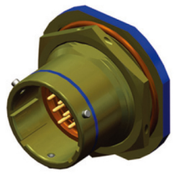
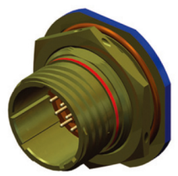
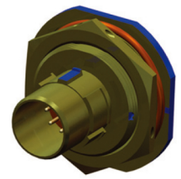

키정렬 (Polarizing Positions)

Series I

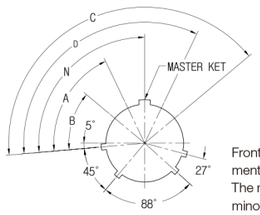

Front face of receptacle(plug opposite.) Insert arrangement does not rotate with main key-keyway.
The master key is rotated to provide shell polarization; the minor keys remain fixed.

Angle of Rotation (Degrees)

Shell Size	Normal	A	B	C	D
9	95°	77°			113°
11	95°	81°	67°	123°	109°
13	95°	75°	63°	127°	115°
15	95°	74°	61°	129°	116°
17	95°	77°	65°	125°	113°
19	95°	77°	65°	125°	113°
21	95°	77°	65°	125°	113°
23	95°	80°	69°	121°	110°
25	95°	80°	69°	121°	110°

Series III

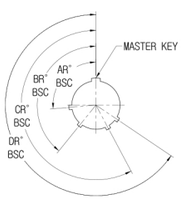

Receptacle
(Front face shown)

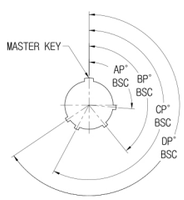

Plug
(Front face shown)

Note
1. All Angles are BSC
2. The insert arrangement does not rotate with main key/keyway
3. All minor keys are rotated to provide shell polarization, the master key remains fixed at twelve o'clock position.
4. Polarization is different from series I.

Shell Size	Key & Keyway Arrangement Identification Letter	Key Locations			
		AR°or AP° BSC	BR° or BP° BSC	CR° or CP° BSC	DR° or DP° BSC
9	N	105	140	215	265
	A	102	132	248	320
	B	80	118	230	312
	C	35	140	205	275
	D	64	155	234	304
	E	91	131	197	240
11 13 and 15	N	95	141	208	236
	A	113	156	182	292
	B	90	145	195	252
	C	53	156	220	255
	D	119	146	176	298
	E	51	141	184	242
17 and 19	N	80	142	196	293
	A	135	170	200	310
	B	49	169	200	244
	C	66	140	200	257
	D	62	145	180	280
	E	79	153	197	272
21 23 and 25	N	80	142	196	293
	A	135	170	200	310
	B	49	169	200	244
	C	66	140	200	257
	D	62	145	180	280
	E	79	153	197	272

Series IV

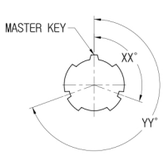

Receptacle
(Front face shown)

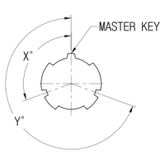

Plug
(Front face shown)

Note
1. All Angles are BSC
2. The insert arrangement does not rotate with main key/key way
3. All minor keys are rotated to provide shell polarization, the master key remains fixed at twelve o'clock position.
4. Polarization is different from series i.

Shell Size	Key & Keyway Arrangement Identification Letter	Key Locations	
		X°or XX°	Y°or YY°
11 13 15 17 19 21 and 23	N	110	250
	A	100	260
	B	90	270
	C	80	280
	D	70	290
	L	120	265
	M	120	275
	R	120	285
	U	0	0

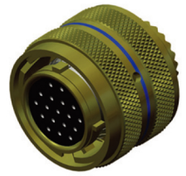

Insert Availability and Identification

Series I,III & IV	Service Rating	Total Contacts	Contact Size						
			22D	22M	22	20	16	12	8
9-35	M	6	6						
9-44	M	4			4				
9-98	I	4				3			
11-4	I	4				4			
11-5	I	5				5			
11-35	M	13	13						
11-98	I	6				6			
11-99	I	7				7			
13-4	I	4					4		
13-8	I	8				8			
13-22	M	22		22					
13-35	M	22	22						
13-98	I	10				10			
15-5	II	5					5		
15-15	I	15				14	1		
15-18	I	18				18			
15-19	I	19				19			
15-35	M	37	37						
15-97	I	12				8	4		
17-6	I	6						6	
17-8	II	8					8		
17-26	I	26				26			
17-35	M	55	55						
17-99	I	23				21	2		
19-11	II	11					11		
19-32	I	32				32			
19-35	M	66	66						
21-11	I	11						11	
21-16	II	16					16		
21-35	M	79	79						
21-39	I	39				37	2		
21-41	I	41				41			
23-35	M	100	100						
23-53	I	53				53			
23-55	I	55				55			
25-4	I	56				48	8		
25-19	I	19						19	
25-35	M	128	128						
25-37	I	37					37		
25-43	I	43				23	20		
25-46	I. Twinax	46				40	4		2***
25-61	I	61				61			

* Coax for RG-180 cables

** Coax for RG-174, RG-179 or RG-316 cables

*** Twinax for M17/176-00002 cables (check factory for other cable applications)

Shell Size 9

Shell Size 11

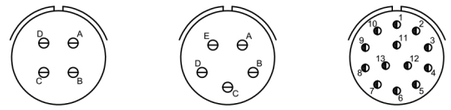

Insert Arrangement	9-35	9-44	9-98	11-4	11-5	11-35
Service Rating	M	M	I	I	I	M
Number of Contacts	6	4	3	4	5	13
Contact Size	22D	22	20	20	20	22D

Shell Size 11

Shell Size 13

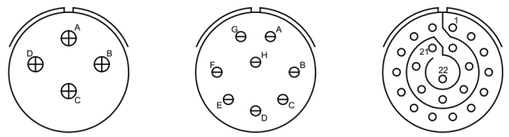

Insert Arrangement	11-98	11-99	13-4	13-8	13-22
Service Rating	I	I	I	I	M
Number of Contacts	6	7	4	8	22
Contact Size	20	20	16	20	22M

Shell Size 13

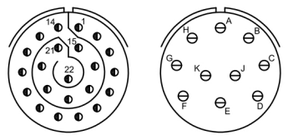

Shell Size 15

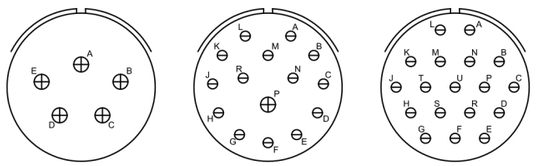

Insert Arrangement	13-35	13-98	15-5	15-15	15-18
Service Rating	M	I	II	I	I
Number of Contacts	22	10	5	14 1	18
Contact Size	22D	20	16	20 16	20

Shell Size 15

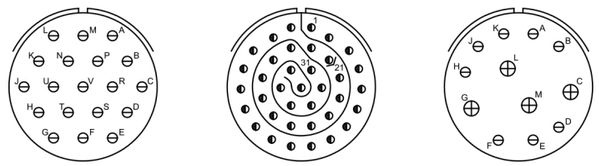

Shell Size 17

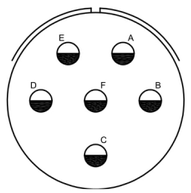

Insert Arrangement	15-19	15-35	15-97	17-6
Service Rating	I	M	I	I
Number of Contacts	19	37	8 4	6
Contact Size	20	22D	20 16	12

Shell Size 17

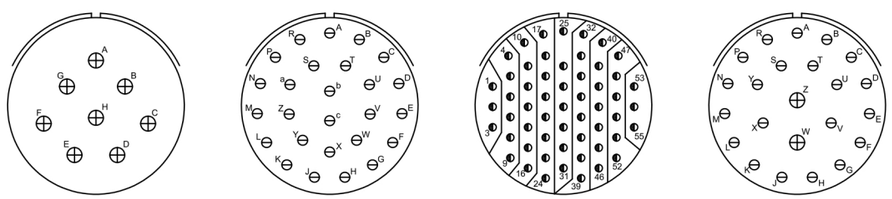

Insert Arrangement	17-8	17-26	17-35	17-99
Service Rating	II	I	M	I
Number of Contacts	8	26	55	21 2
Contact Size	16	20	22D	20 16

1. View looking into front face of pin insert(+insulator).
2. Please make a direct inquiry for the information not contained in the table.
3. The contact arrangement in the table meets the MIL-STD-1560A standards.

Contact Legend: 8 10 12 16 20 22 22M 22D

38999 Series Style 접점 배열도 (Contact Arrangements)

Shell Size 19

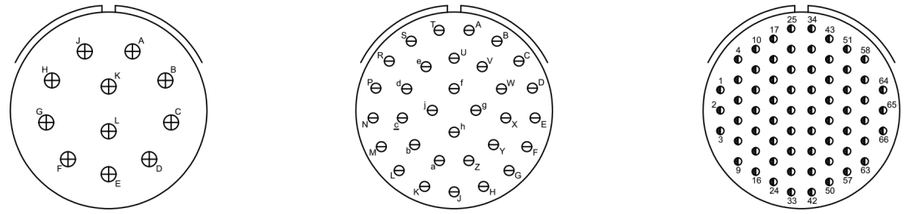

Insert Arrangement	19-11	19-32	19-35
Service Rating	II	I	M
Number of Contacts	11	32	66
Contact Size	16	20	22D

Shell Size 21

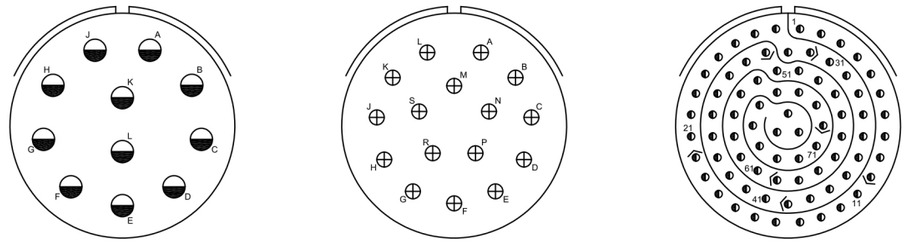

Insert Arrangement	21-11	21-16	21-35
Service Rating	I	II	M
Number of Contacts	11	16	79
Contact Size	12	16	22D

Shell Size 21

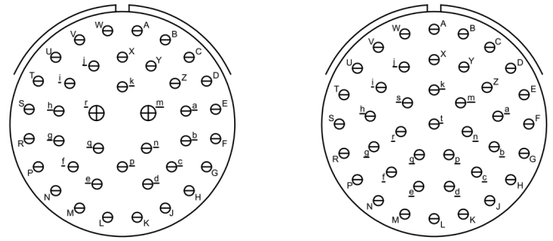

Shell Size 23

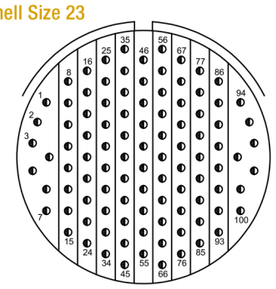

Insert Arrangement	21-39	21-41	23-35
Service Rating	I	I	M
Number of Contacts	37 2	41	100
Contact Size	20 16	20	22D

Shell Size 23

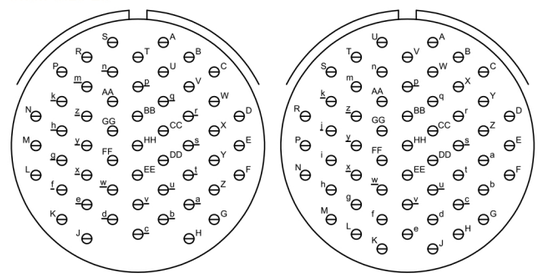

Shell Size 25

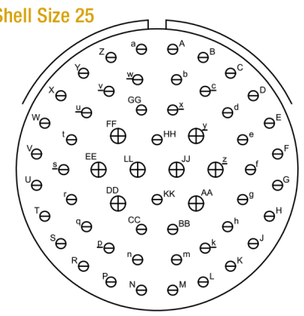

Insert Arrangement	23-53	23-55	25-4
Service Rating	I	I	I
Number of Contacts	53	55	48 8
Contact Size	20	20	20 16

1. View looking into front face of pin insert(+insulator).
2. Please make a direct inquiry for the information not contained in the table.
3. The contact arrangement in the table meets the MIL-STD-1560A standards.

Contact Legend: 8 10 12 16 20 22 22M 22D

38999 Series Style 접점 배열도 (Contact Arrangements)

Shell Size 25

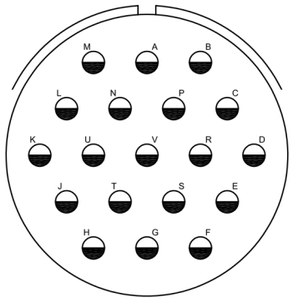

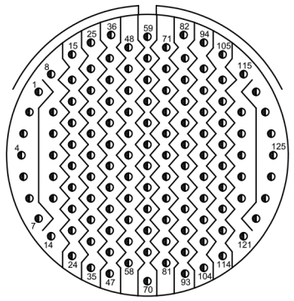

Insert Arrangement	25-19	25-35
Service Rating	I	M
Number of Contacts	19	128
Contact Size	12	22D

Shell Size 25

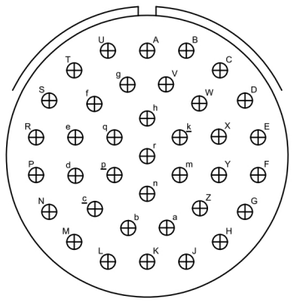

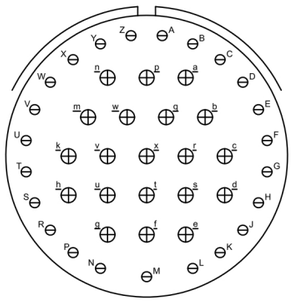

Insert Arrangement	25-37	25-43
Service Rating	I	I
Number of Contacts	37	23 20
Contact Size	16	20 16

Shell Size 25

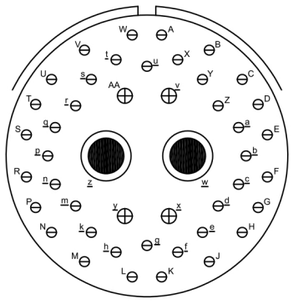

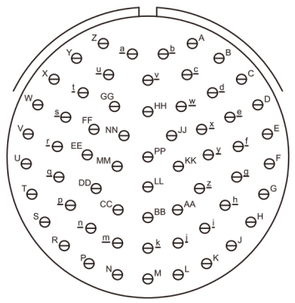

Insert Arrangement	25-46	25-61
Service Rating	I	I
Number of Contacts	40 4 2	61
Contact Size	20 16 8 Coax.	20

1. View looking into front face of pin insert(+insulator).
2. Please make a direct inquiry for the information not contained in the table.
3. The contact arrangement in the table meets the MIL-STD-1560A standards.

Contact Legend: 8, 10, 12, 16, 20, 22, 22M, 22D

38999 Series I Style Connector

품명구성 (Ordering Information)

Military Nomenclature

MS27467 T 17 B 35 S N

- MS Number Shell Style
- Class
- Shell Size
- Hardware Finish
- Contact Arrangement
- Contact Style
- Polarizing Position

- **MS Number Shell Style**
  MS27466 - Wall Mounting Receptacle
  MS27467 - Grounded Plug, Grounded
  MS27468 - Jam Nut Receptacle
  MS27656 - Wall Mounting Receptacle (back panel)(Class E)
- **Class**
  E - Inactive for new design. Superseded by Class T.
  T - Environment - resistant with accessory threads and teeth.
- **Shell Size**
  9, 11, 13, 15, 17, 19, 21, 23, and 25
- **Contact Arrangement**
  MIL-STD-1560A
- **Hardware Finish**
  A - Silver to light iridescent color cadmium plate over nickel, -65℃ to +150℃ (-85℉ to +302℉)
  B - Olive drab cadmium over electroless nickel plate, -65℃ to +175℃ (-85℉ to +347℉)
  F - Electroless nickel coating, -65℃ to +200℃ (-85℉ to 392℉)
- **Contact Style**
  P - Pin
  S - Socket
  A - Less Pin Contact*
  B - Less Socket Contact*
  * Used only when other than power contacts are to be installed (i.e., shielded, thermocouple, etc.)
- **Polarizing Position**
  A, B, C, and D. (No letters required for normal)
  Note : To order MS connectors less standard power contacts, purchase order must state "Less Contacts".

Yeonhab Nomenclature

YH 27467 T 17 B 35 S N

- Prefix
- Shell Style
- Class
- Shell Size
- Hardware Finish
- Contact Arrangement
- Contact Style
- Polarizing Position

- **Prefix**
  YH - YEONHAB
- **Shell Style**
  27466 - Wall Mounting Receptacle
  27467 - Grounded Plug, Grounded
  27468 - Jam Nut Receptacle
  27656 - Wall Mounting Receptacle (back panel)(Class E)
- **Class**
  E - Inactive for new design. Superseded by Class T.
  T - Environment - resistant with accessory threads and teeth.
- **Shell Size**
  9, 11, 13, 15, 17, 19, 21, 23, and 25
- **Hardware Finish**
  A - Silver to light iridescent color cadmium plate over nickel, -65℃ to +150℃ (-85℉ to +302℉)
  B - Olive drab cadmium over electroless nickel plate, -65℃ to +175℃ (-85℉ to +347℉)
  F - Electroless nickel coating, -65℃ to +200℃ (-85℉ to 392℉)
- **Contact Arrangement**
  MIL-STD-1560A
- **Contact Style**
  P - Pin
  S - Socket
  A - Less Pin Contact*
  B - Less Socket Contact*
  * Used only when other than power contacts are to be installed (i.e., shielded, thermocouple, etc.)
- **Polarizing Position**
  A, B, C, and D. (No letters required for normal)

Wall Mounting Receptacle (MS27466)

YH27466 Classes “E”, “T”

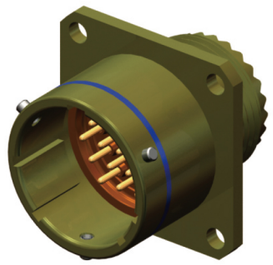

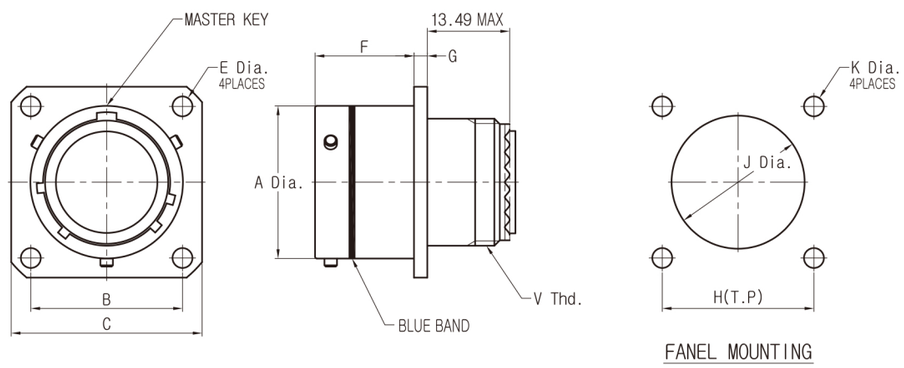

Shell Size	A Dia. +0.03 -0.13	B BSC	C ±0.51	E Dia. +0.25 -0.13	F +0.00 -0.13	G +0.38 -0.00	H (T.P)	J Dia. MIN.	K Dia. ±0.13	V (Class : 2A) THD.
9	14.53	18.26	23.83	3.25	16.05	2.16	18.26	16.66	3.25	7/16-28UNEF
11	17.78	20.26	26.19	3.25	16.05	2.16	20.26	20.22	3.25	9/16-24UNEF
13	21.59	23.01	28.58	3.25	16.05	2.16	23.01	23.42	3.25	11/16-24UNEF
15	24.77	24.61	30.96	3.25	16.05	2.16	24.61	26.59	3.25	13/16-20UNEF
17	27.94	26.97	33.33	3.25	16.05	2.16	26.97	30.96	3.25	15/16-20UNEF
19	30.66	29.36	36.53	3.25	16.05	2.16	29.36	32.94	3.25	1 1/16-18UNEF
21	33.83	31.75	39.66	3.25	15.29	2.92	31.75	36.12	3.25	1 3/16-18UNEF
23	37.01	34.93	42.88	3.73	15.29	2.92	34.93	39.29	3.91	1 5/16-18UNEF
25	40.18	38.10	46.03	3.73	15.29	2.92	38.10	42.47	3.81	1 7/16-18UNEF

Straight Plug(EMI) (MS27467)

YH27467 Classes “E”, “T”

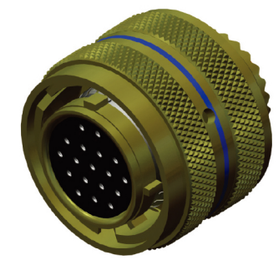

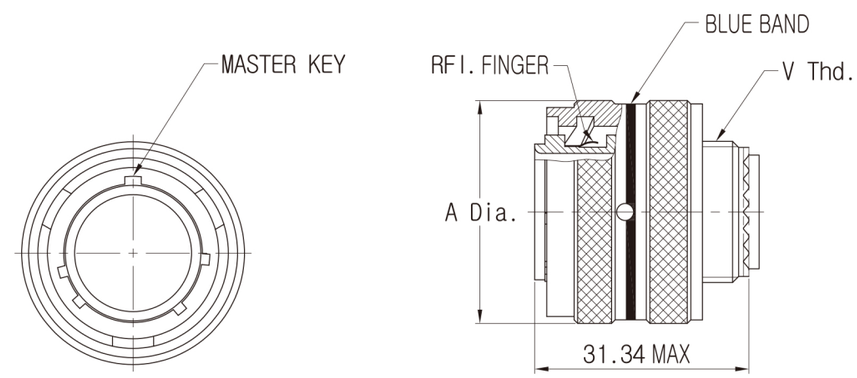

Shell Size	A Dia. MAX.	V (Class : 2A) THD.
9	21.82	7/16-28UNEF
11	24.99	9/16-24UNEF
13	29.36	11/16-24UNEF
15	32.54	13/16-20UNEF
17	35.71	15/16-20UNEF
19	38.51	1 1/16-18UNEF
21	41.68	1 3/16-18UNEF
23	43.86	1 5/16-18UNEF
25	48.03	1 7/16-18UNEF

Jam Nut Receptacle (MS27468)

YH27468 Classes “E”, “T”

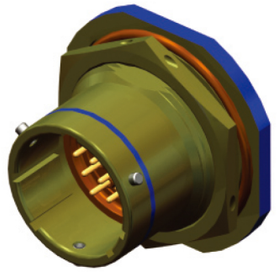

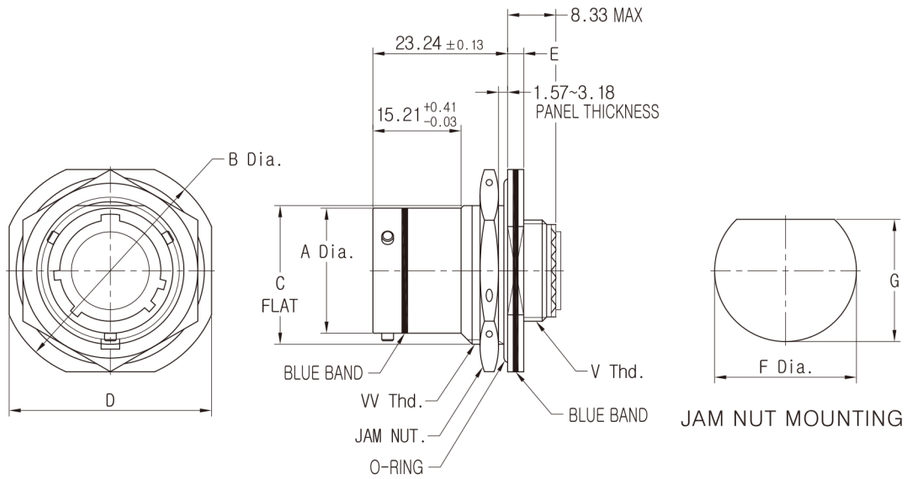

Shell Size	A Dia. +0.03 -0.13	B Dia. ±0.41	C flat +0.00 -0.25	D ±0.41	E +0.28 -0.25	F Dia. +0.25 -0.00	G +0.00 -0.25	V (Class : 2A) THD.	VV (Ckass : 2A) THD.	O-Ring AS3578 DASH No.	Jam Nut YH3186 DASH No.
9	14.53	30.18	16.64	26.98	2.77	17.78	17.02	7/16-28UNEF	11/16-24UNEF	-019	-106
11	17.78	34.93	19.18	31.75	2.77	20.96	19.58	9/16-24UNEF	13/16-20UNEF	-022	-108
13	21.59	38.10	23.93	34.93	2.77	25.65	24.26	11/16-24UNEF	1-20UNEF	-024	-111
15	24.77	41.28	27.07	38.10	2.77	28.83	27.56	13/16-20UNEF	1 1/8-18UNEF	-026	-113
17	27.94	44.45	30.25	41.28	2.77	32.00	30.73	15/16-20UNEF	1 1/4-18UNEF	-028	-116
19	30.66	49.23	33.43	46.03	3.56	35.18	33.91	1 1/16-18UNEF	1 3/8-18UNEF	-128	-117
21	33.83	52.38	36.60	49.23	3.56	38.35	37.08	1 3/16-18UNEF	1 1/2-18UNEF	-130	-120
23	37.01	55.58	39.78	52.38	3.56	41.53	40.26	1 5/16-18UNEF	1 5/8-18UNEF	-132	-121
25	40.18	58.73	42.95	55.58	3.56	44.70	43.43	1 7/16-18UNEF	1 3/4-18UNS	-134	-122

Wall Mounting Receptacle(Back Panel) (MS27656)

YH27656 Classes “E”, “T”

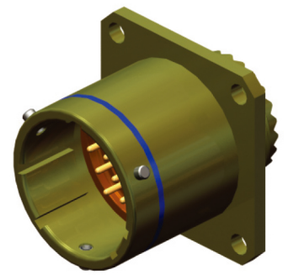

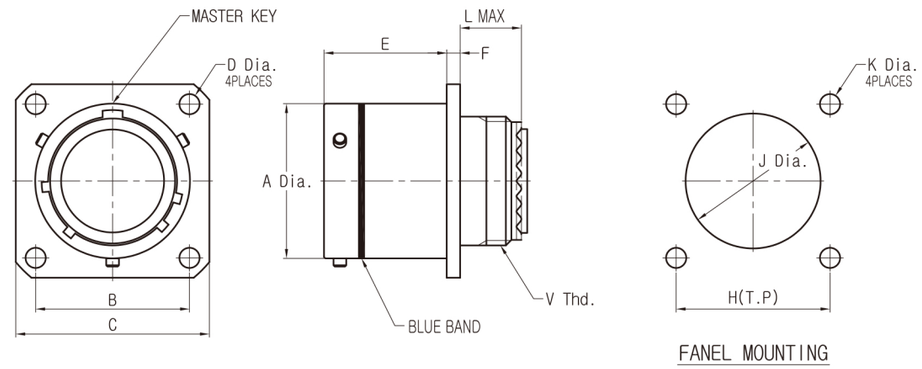

Shell Size	A Dia. +0.03 -0.13	B BSC	C ±0.51	D Dia. +0.25 -0.13	E +0.00 -0.13	F +0.38 -0.00	L MAX.	H (T.P)	J Dia. MIN.	K Dia. ±0.13	V (Class : 2A) THD.
9	14.53	18.26	23.83	3.25	20.83	2.16	11.91	18.26	16.66	3.25	7/16-28UNEF
11	17.78	20.26	26.19	3.25	20.83	2.16	11.91	20.62	20.22	3.25	9/16-24UNEF
13	21.59	23.01	28.58	3.25	20.83	2.16	11.91	23.01	23.42	3.25	11/16-24UNEF
15	24.77	24.61	30.96	3.25	20.83	2.16	11.91	24.61	26.59	3.25	13/16-20UNEF
17	27.94	26.97	33.33	3.25	20.83	2.16	11.91	26.97	30.96	3.25	15/16-20UNEF
19	30.66	29.36	36.53	3.25	20.83	2.16	11.91	29.36	32.94	3.25	1 1/16-18UNEF
21	33.83	31.75	39.66	3.25	20.07	2.92	12.70	31.75	36.12	3.25	1 3/16-18UNEF
23	37.01	34.93	42.88	3.73	20.07	2.92	12.70	34.93	39.29	3.91	1 5/16-18UNEF
25	40.18	38.10	46.03	3.73	20.07	2.92	12.70	38.10	42.47	3.81	1 7/16-18UNEF

Plug Protection Cap (MS27501)

YH27501

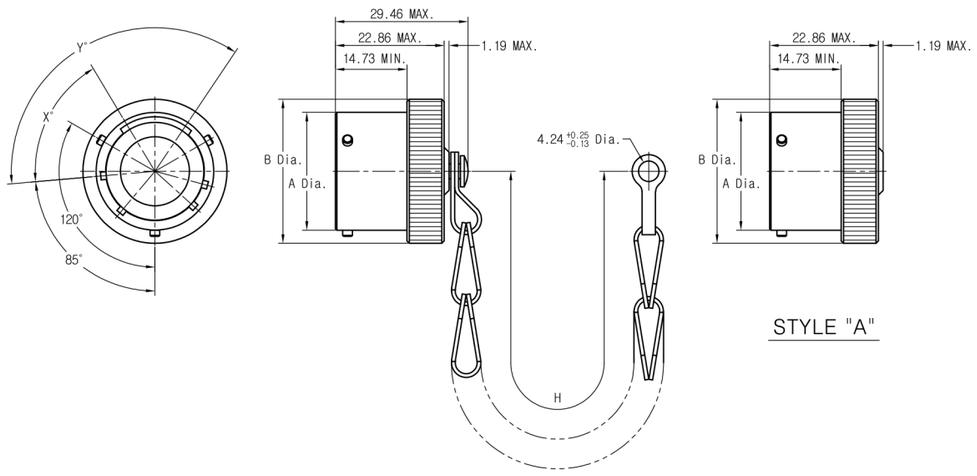

Shell Size	A Dia. +0.03 -0.13	B Dia. MAX.	H +12.7 -6.35 Standard Chain Length	X°	Y°
9	14.53	20.83	76.2	77	113
11	17.78	23.88		67	123
13	21.59	27.18	88.9	63	127
15	24.77	30.23		61	129
17	27.94	33.53		65	125
19	30.66	36.58		65	125
21	33.83	39.88	101.6	65	125
23	37.01	42.93		69	121
25	40.18	46.23		69	121

	Finish
A	Cadmium plat nickel base
B	Olive drab, cadmium, nickel base
C	Anodic coating
F	Electroless nickel

How To Order

MS27501 B 11 C L

- **MS Number**
- **Finish**
- **Shell Size**
- **Style**
  - A - Without Chain
  - C - Chain
- **Length**
  - (Omit for style A or style C with standard chain length)
  - (Tolerance : +12.7, -6.35)
  - L - 5 inch chain in lieu of standard length
  - M - 6 inch chain in lieu of standard length
  - N - 7 inch chain in lieu of standard length

YH27501 B 11 C L

- **YH Number**
- **Finish**
- **Shell Size**
- **Style**
  - A - Without Chain
  - C - Chain
- **Length**
  - (Omit for style A or style C with standard chain length)
  - (Tolerance : +12.7, -6.35)
  - L - 5 inch chain in lieu of standard length
  - M - 6 inch chain in lieu of standard length
  - N - 7 inch chain in lieu of standard length

RECEPTACLE Protection Cap (MS27502)

YH27502

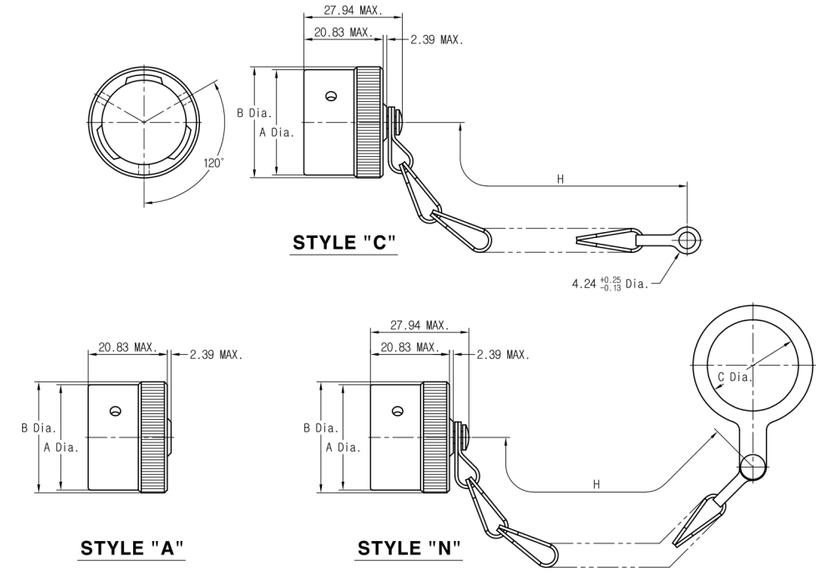

Shell Size	A Dia. MAX	B Dia. MAX.	C Dia, MAX.	H +12.7 -6.35 Standard Chain Length
9	20.83	21.84	17.78	76.2
11	23.88	24.89	21.34	
13	27.94	29.46	25.65	88.9
15	30.99	32.51	28.96	
17	34.04	35.81	32.00	
19	37.08	38.61	35.31	
21	40.13	41.91	38.35	101.6
23	43.18	44.96	41.66	
25	46.48	48.01	44.70	

	Finish
A	Cadmium plat nickel base
B	Olive drab, cadmium, nickel base
C	Anodic coating
F	Electroless nickel

How To Order

MS27502 B 11 C L

- **MS Number**
- **Finish**
- **Shell Size**
- **Style**
  - A - Without Chain
  - C - Chain
  - N - With Chain and RIng
- **Length**
  - (Omit for style A or style C and N with standard chain length)
  - L - 5 inch chain in lieu of standard length

YH27502 B 11 C L

- **YH Number**
- **Finish**
- **Shell Size**
- **Style**
  - A - Without Chain
  - C - Chain
  - N - With Chain and RIng
- **Length**
  - (Omit for style A or style C and N with standard chain length)
  - L - 5 inch chain in lieu of standard length

품명구성(Ordering Information)

Military Nomenclature

D38999/ 20 F C 35 P N

- Connector Type
- Shell Style
- Service Class (Hardware Finish)
- Shell Size
- Contact Arrangement
- Contact Style
- Polarizing Position

- **Connector Type**
  D38999/ - MIL-DTL-38999 Series III
- **Shell Style**
  D38999/20 - Wall mount receptacle
  D38999/24 - Jam nut receptacle
  D38999/26 - Straight Plug, Grounded
- **Hardware Finish**
  F - Electroless nickel coating, -65℃ to +200℃ (-85℉ to 392℉)
  W - Olive drab cadmium over electroless nickel plate, -65℃ to +175℃ (-85℉ to +347℉)
- **Shell Size**

Shell Size Code	A	B	C	D	E	F	G	H	J
Shell Size	9	11	13	15	17	19	21	23	25

- **Contact Arrangement**
  MIL-STD-1560A
- **Contact Style**
  P - Pin
  S - Socket
  A - Less Pin Contact*
  B - Less Socket Contact*
  * Used only when other than power contacts are to be installed(i.e., shielded, thermocouple, etc.)
- **Polarizing Position**
  N(normal), A, B, C, D, E
  Note : To order MS connectors less standard power contacts, purchase order must state "Less Contacts".

Yeonhab Nomenclature

YH 38999/ 20 F C 35 P N

- Prefix
- Connector Type
- Shell Style
- Service Class (Hardware FInish)
- Shell Size
- Contact Arrangement
- Contact Style
- Polarizing Position

- **Prefix**
  YH - YEONHAB
- **Connector Type**
  D38999/ - MIL-DTL-38999 Series III
- **Shell Style**
  38999/20 - Wall mount receptacle
  38999/24 - Jam nut receptacle
  38999/26 - Straight Plug, Grounded
- **Hardware Finish**
  F - Electroless nickel coating, -65℃ to +200℃ (-85℉ to 392℉)
  W - Olive drab cadmium over electroless nickel plate, -65℃ to +175℃ (-85℉ to +347℉)
- **Shell Size**

Shell Size Code	A	B	C	D	E	F	G	H	J
Shell Size	9	11	13	15	17	19	21	23	25

- **Contact Arrangement**
  MIL-STD-1560A
- **Contact Style**
  P - Pin
  S - Socket
  A - Less Pin Contact*
  B - Less Socket Contact*
  * Used only when other than power contacts are to be installed (i.e., shielded, thermocouple, etc.)
- **Polarizing Position**
  N(normal), A, B, C, D, E

Jam Nut Receptacle (D38999/24)

YH38999/24 Classes "F", "W"

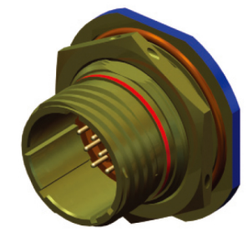

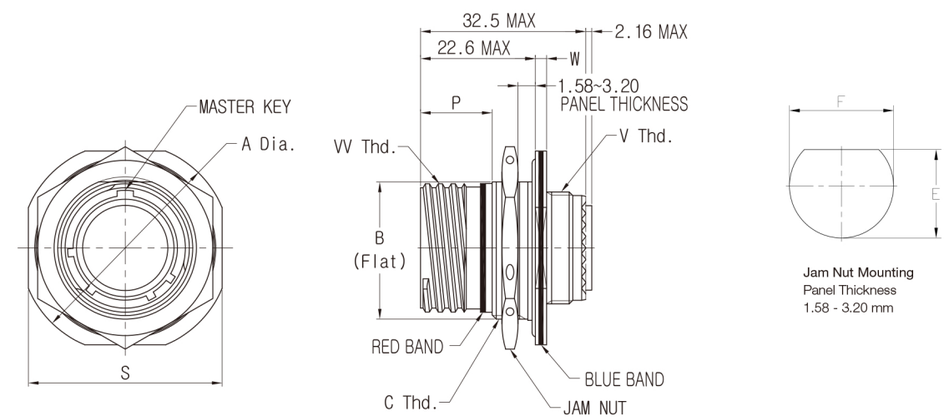

Shell Size	Shell Size Code	A Dia. ±0.3	B flat +0.10 -0.15	C THD.	P +0.6 -0.0	S ±0.4	W +0.9 -0.1	V THD.	VV (Class : 2A) THD.	O-Ring YH3582 DASH No.	Jam Nut YH38999/28 DASH No.
9	A	30.2	16.53	M17x1.0-6g 0.1R	14.1	27.0	2.2	M12x1.0-6g 0.1R	.6250-0.1P-0.3L-TS	019	-1
11	B	34.9	19.07	M20x1.0-6g 0.1R	14.1	31.8	2.2	M15x1.0-6g 0.1R	.7500-0.1P-0.3L-TS	022	-2
13	C	38.1	23.82	M25x1.0-6g 0.1R	14.1	34.9	2.2	M18x1.0-6g 0.1R	.8750-0.1P-0.3L-TS	024	-3
15	D	41.3	26.97	M28x1.0-6g 0.1R	14.1	38.1	2.2	M22x1.0-6g 0.1R	1.0000-0.1P-0.3L-TS	026	-4
17	E	44.5	30.15	M32x1.0-6g 0.1R	14.1	41.3	2.2	M25x1.0-6g 0.1R	1.1875-0.1P-0.3L-TS	028	-6
19	F	49.2	33.32	M35x1.0-6g 0.1R	14.1	46.0	3.0	M28x1.0-6g 0.1R	1.2500-0.1P-0.3L-TS	128	-8
21	G	52.4	36.50	M38x1.0-6g 0.1R	14.1	49.2	3.0	M31x1.0-6g 0.1R	1.3750-0.1P-0.3L-TS	130	-9
23	H	55.6	39.67	M41x1.0-6g 0.1R	14.1	52.4	3.0	M34x1.0-6g 0.1R	1.5000-0.1P-0.3L-TS	132	-10
25	J	58.7	42.85	M44x1.0-6g 0.1R	14.1	55.6	3.0	M37x1.0-6g 0.1R	1.6250-0.1P-0.3L-TS	134	-11

Shell Size	Inch-LBS Torque	E +0.00 -0.25	F Dia. +0.25 -0.00
A (9)	30/36	17.02	17.78
B (11)	40/45	19.59	20.96
C (13)	55/60	24.26	25.63
D (15)	70/75	27.56	28.83
E (17)	80/85	30.73	32.01
F (19)	90/95	33.91	35.18
G (21)	100/110	37.08	38.35
H (23)	110/120	40.26	41.53
J (25)	120/130	43.43	44.70

Square Flange Receptacle (D38999/20)

YH38999/20 Classes “F”, “W”

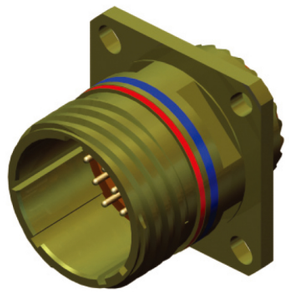

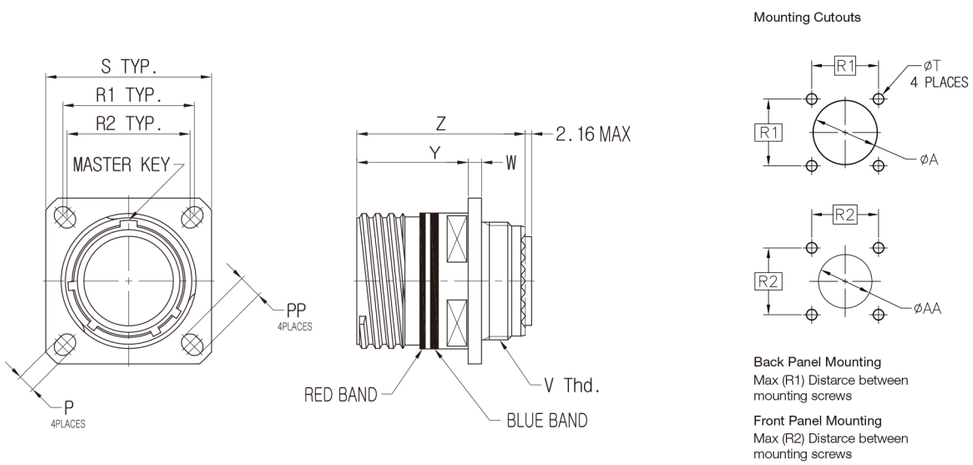

Shell Size	Shell Size Code	P ±0.20	PP ±0.20	R1	R2	S ±0.3	Y +0.00 -0.13	W MAX. /MIN.	Z MAX.	V THD.	VV (Class : 2A) THD.
9	A	3.25	5.49	18.26	15.09	23.8	20.83	2.5/2.1	31.5	M12x1.0-6g 0.1R	.6250-0.1P-0.3L-TS
11	B	3.25	4.93	20.62	18.26	26.2	20.83	2.5/2.1	31.5	M15x1.0-6g 0.1R	.7500-0.1P-0.3L-TS
13	C	3.25	4.93	23.01	20.62	28.6	20.83	2.5/2.1	31.5	M18x1.0-6g 0.1R	.8750-0.1P-0.3L-TS
15	D	3.25	4.93	24.61	23.01	31.0	20.83	2.5/2.1	31.5	M22x1.0-6g 0.1R	1.0000-0.1P-0.3L-TS
17	E	3.25	4.93	26.97	24.61	33.3	20.83	2.5/2.1	31.5	M25x1.0-6g 0.1R	1.1875-0.1P-0.3L-TS
19	F	3.25	4.93	29.36	26.97	36.5	20.83	2.5/2.1	31.5	M28x1.0-6g 0.1R	1.2500-0.1P-0.3L-TS
21	G	3.25	4.93	31.75	29.36	39.7	20.07	3.2/2.1	31.5	M31x1.0-6g 0.1R	1.3750-0.1P-0.3L-TS
23	H	3.91	6.15	34.93	31.75	42.9	20.07	3.2/2.1	31.5	M34x1.0-6g 0.1R	1.5000-0.1P-0.3L-TS
25	J	3.91	6.15	38.10	34.93	46.0	20.07	3.2/2.1	31.5	M37x1.0-6g 0.1R	1.6250-0.1P-0.3L-TS

Shell Size	ØA DIS MIN.	ØAA DIS MIN.	R1	R2	ØT ±0.13
A (9)	16.66	13.11	18.26	15.09	3.25
B (11)	20.22	15.88	20.62	18.26	3.25
C (13)	23.42	19.05	23.01	20.62	3.25
D (15)	26.59	23.01	24.61	23.01	3.25
E (17)	30.96	25.81	26.97	24.61	3.25
F (19)	32.94	28.95	29.36	26.97	3.25
G (21)	36.12	32.16	31.75	29.36	3.25
H (23)	39.29	34.93	34.93	31.75	3.91
J (25)	42.47	37.69	38.10	34.93	3.91

Note : Dimensions are in milimeters. Inch equivalents are in parentheses (given for general information only.)
R2 dimension may be substituted for mounting screw locations (R1) or front mount cutouts

Straight Plug(EMI) (D38999/26)

YH38999/26 Classes “F”, “W”

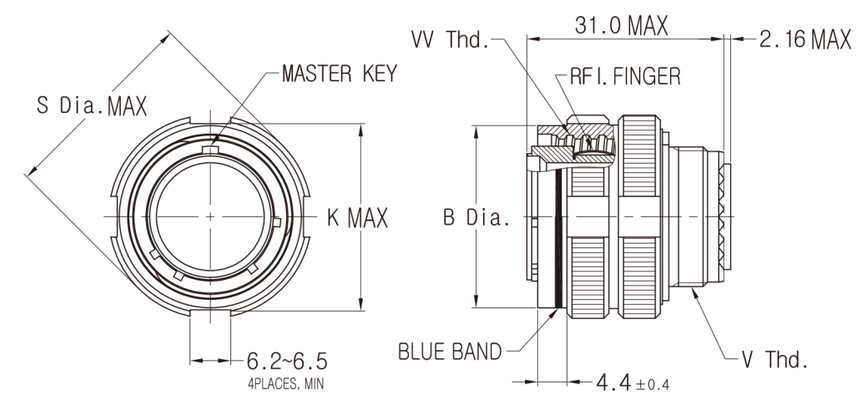

Shell Size	Shell Size Code	B Dia. +0.2 -0.0	K MAX.	S Dia. MAX.	V THD.	VV (Class : 2B) THD.
9	A	18.4	19.0	21.8	M12x1.0-6g 0.1R	.6250-0.1P-0.3L-TS
11	B	21.1	21.9	25.0	M15x1.0-6g 0.1R	.7500-0.1P-0.3L-TS
13	C	25.4	26.1	29.4	M18x1.0-6g 0.1R	.8750-0.1P-0.3L-TS
15	D	28.7	29.3	32.5	M22x1.0-6g 0.1R	1.0000-0.1P-0.3L-TS
17	E	32.2	32.8	35.7	M25x1.0-6g 0.1R	1.1875-0.1P-0.3L-TS
19	F	34.9	35.5	38.5	M28x1.0-6g 0.1R	1.2500-0.1P-0.3L-TS
21	G	38.1	38.7	41.7	M31x1.0-6g 0.1R	1.3750-0.1P-0.3L-TS
23	H	41.1	41.7	44.9	M3 4x1.0-6g 0.1R	1.5000-0.1P-0.3L-TS
25	J	44.3	44.9	48.0	M37x1.0-6g 0.1R	1.6250-0.1P-0.3L-TS

Plug Protection Cap (D38999/32)

YH38999/32

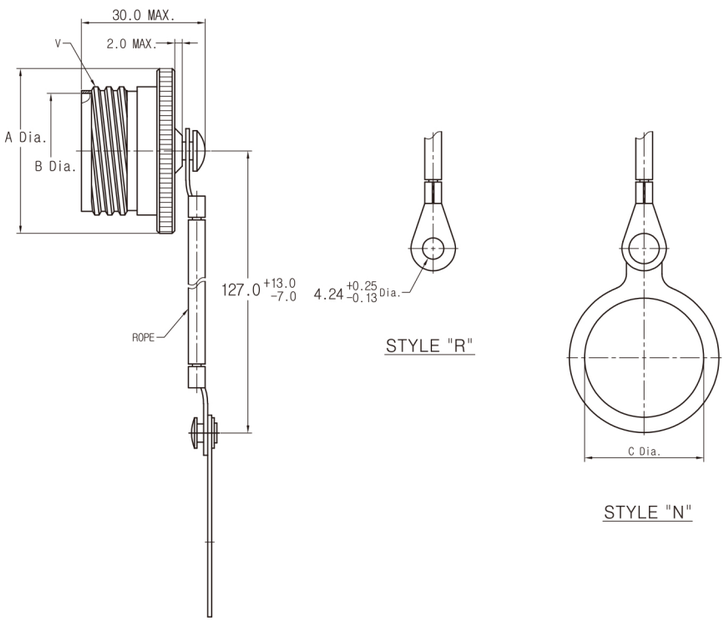

Shell Size	A Dia. MAX.	B Dia. +0.00 -0.15	C Dia. MIN.	V (Class : 2A) THD.
9	23.0	12.50	13.0	.6250-0.1P-0.3L-TS
11	26.0	15.75	18.0	.7500-0.1P-0.3L-TS
13	31.0	19.53	20.0	.8750-0.1P-0.3L-TS
15	33.0	22.71	23.0	1.0000-0.1P-0.3L-TS
17	37.0	25.88	26.0	1.1875-0.1P-0.3L-TS
19	40.0	28.55	29.0	1.2500-0.1P-0.3L-TS
21	44.0	31.72	32.0	1.3750-0.1P-0.3L-TS
23	46.0	34.90	34.0	1.5000-0.1P-0.3L-TS
25	50.0	38.07	39.0	1.6250-0.1P-0.3L-TS

Class	Finish
A	Electroless nickel coating
F	Olive drab, cadmium, nickel base

How To Order

D38999/ 32 W 11 R

- MS Number
- Shell Style
- Class
- Shell Size
- Style
  - R - Rope
  - N - With Rope and Ring

YH38999/ 32 W 11 R

- YH Number
- Shell Style
- Class
- Shell Size
- Style
  - R - Rope
  - N - With Rope and Ring

38999 Series III Style Connector

Receptacle Protection Cap (D38999/33)

YH38999/33

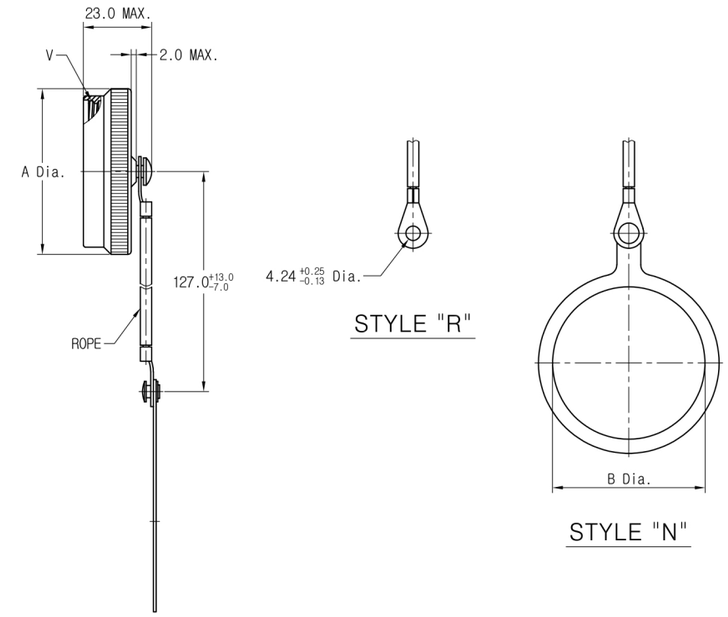

Shell Size	A Dia. MAX.	B Dia. MIN.	V (Class : 2A) THD.
9	23.0	17.64	.6250-0.1P-0.3L-TS
11	28.0	21.97	.7500-0.1P-0.3L-TS
13	31.0	25.12	.8750-0.1P-0.3L-TS
15	32.0	29.92	1.0000-0.1P-0.3L-TS
17	37.0	32.00	1.1875-0.1P-0.3L-TS
19	39.0	36.27	1.2500-0.1P-0.3L-TS
21	42.0	38.25	1.3750-0.1P-0.3L-TS
23	45.0	42.62	1.5000-0.1P-0.3L-TS
25	49.0	44.45	1.6250-0.1P-0.3L-TS

Class	Finish
F	Electroless nickel coating
W	Olive drab, cadmium, nickel base

How To Order

D38999/ 33 W 11 R

- MS Number
- Shell Style
- Class
- Shell Size
- Style
  - R - Rope
  - N - With Rope and Ring

YH38999/ 33 W 11 R

- YH Number
- Shell Style
- Class
- Shell Size
- Style
  - R - Rope
  - N - With Rope and Ring

품명구성 (Ordering Information)

Military Nomenclature

D38999/ 40 F C 35 P N

- Connector Type
- Shell Style
- Service Class (Hardware Finish)
- Shell Size
- Contact Arrangement
- Contact Style
- Polarizing Position

- **Connector Type**
  D38999/ - MIL-DTL-38999 Series IV
- **Shell Style**
  D38999/40 - Wall mount receptacle
  D38999/42 - Box mount receptacle
  D38999/44 - Jam nut receptacle
  D38999/46 - Straight Plug, Grounded
  D38999/49 - In-Line receptacle
- **Hardware Finish**
  F - Electroless nickel coating, -65℃ to +200℃ (-85℉ to 392℉)
  W - Olive drab cadmium over electroless nickel plate, -65℃ to +175℃ (-85℉ to +347℉)
- **Shell Size**

Shell Size Code	B	C	D	E	F	G	H	J
Shell Size	11	13	15	17	19	21	23	25

- **Contact Arrangement**
  MIL-STD-1560A
- **Contact Style**
  P - Pin
  S - Socket
  A - Less Pin Contact*
  B - Less Socket Contact*
  * Used only when other than power contacts are to be installed (i.e., shielded, thermocouple, etc.)
- **Polarizing Position**
  N(normal), A, B, C, D, E
  Note : To order MS connectors less standard power contacts, purchase order must state "Less Contacts".

Yeonhab Nomenclature

YH 38999/ 40 F C 35 P N

- Prefix
- Connector Type
- Shell Style
- Service Class (Hardware FInish)
- Shell Size
- Contact Arrangement
- Contact Style
- Polarizing Position

- **Prefix**
  YH - YEONHAB
  Connector Type
  D38999/ - MIL-DTL-38999 Series IV
- **Shell Style**
  38999/40 - Wall mount receptacle
  38999/42 - Box mount receptacle
  38999/44 - Jam nut receptacle
  38999/46 - Straight Plug, Grounded
  38999/49 - In-Line receptacle
- **Hardware Finish**
  F - Electroless nickel coating, -65℃ to +200℃ (-85℉ to 392℉)
  W - Olive drab cadmium over electroless nickel plate, -65℃ to +175℃(-85℉ to +347℉)
- **Shell Size**

Shell Size Code	B	C	D	E	F	G	H	J
Shell Size	11	13	15	17	19	21	23	25

- **Contact Arrangement**
  MIL-STD-1560A
- **Contact Style**
  P - Pin
  S - Socket
  A - Less Pin Contact*
  B - Less Socket Contact*
  * Used only when other than power contacts are to be installed (i.e., shielded, thermocouple, etc.)
- **Polarizing Position**
  N(normal), A, B, C, D, E

Wall Mounting Receptacle (D38999/40)

YH38999/40 Classes "F", "W"

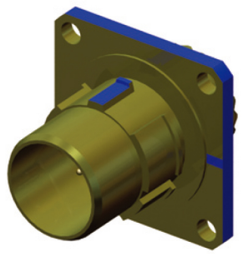

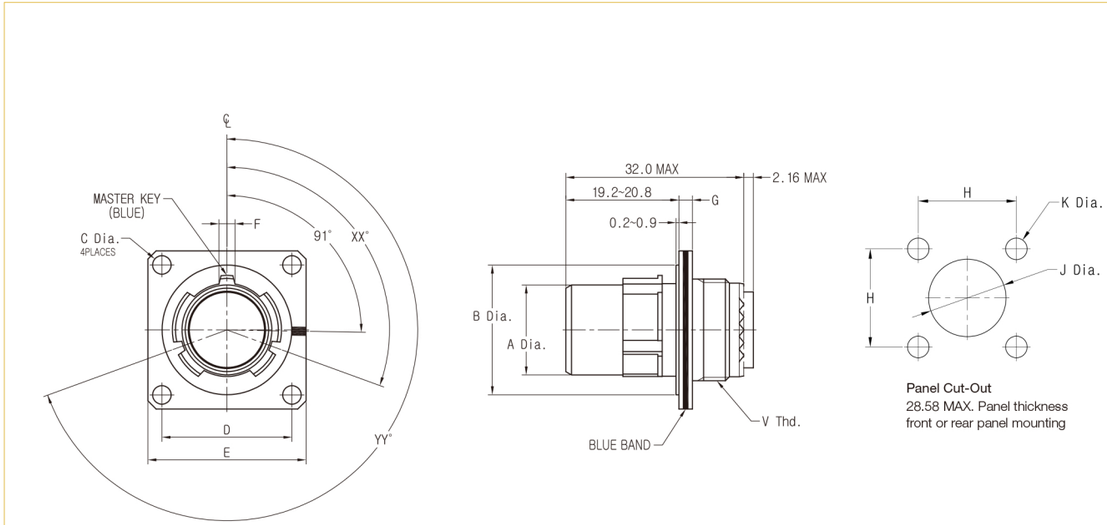

Table 1 : Polarization Chart

Key Position	XX°	YY°
N	110°	250°
A	100°	260°
B	90°	270°
C	80°	280°
D	70°	290°
L	120°	265°
M	120°	275°
R	120°	285°
U	0°	0°

Table 2

Shell Size	Shell Size Code	A Dia.	B Dia.	C Dia.	D BSC	E	F (BSC) Socket	F (BSC) Pin	G	H ±0.13	J Dia. ±0.13	K Dia. ±0.13	V (THD.)
11	B	12.93 12.77	20.15 19.76	3.5 3.1	20.62	26.7 25.6	1.90	2.78	2.6 2.1	20.63	20.47	3.25	M15x1.0-6g 0.1R
13	C	16.10 15.93	23.35 22.96	3.5 3.1	23.02	29.1 28.0	1.94	2.85	2.6 2.1	23.01	23.67	3.25	M18x1.0-6g 0.1R
15	D	19.28 19.12	26.52 26.13	3.5 3.1	24.62	31.5 30.4	2.43	3.36	2.6 2.1	24.61	26.85	3.25	M22x1.0-6g 0.1R
17	E	22.48 22.32	29.72 29.33	3.5 3.1	26.98	33.9 32.8	2.45	3.40	2.6 2.1	26.98	30.05	3.25	M25x1.0-6g 0.1R
19	F	25.63 25.47	32.87 32.48	3.5 3.1	29.36	37.1 36.0	2.96	3.91	2.6 2.1	29.36	33.20	3.25	M28x1.0-6g 0.1R
21	G	28.80 28.64	36.05 35.66	3.5 3.1	31.76	40.2 39.1	2.99	3.94	3.4 2.9	31.75	36.37	3.25	M31x1.0-6g 0.1R
23	H	31.98 31.82	39.22 38.83	4.0 3.6	34.92	43.4 42.3	3.50	4.46	3.4 2.9	34.93	39.55	3.91	M34x1.0-6g 0.1R

Box Mount Receptacle (D38999/42)

YH38999/42 Classes “F”, “W”

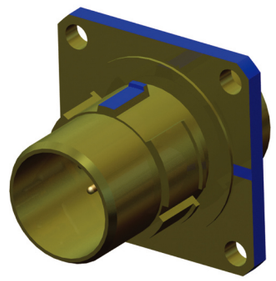

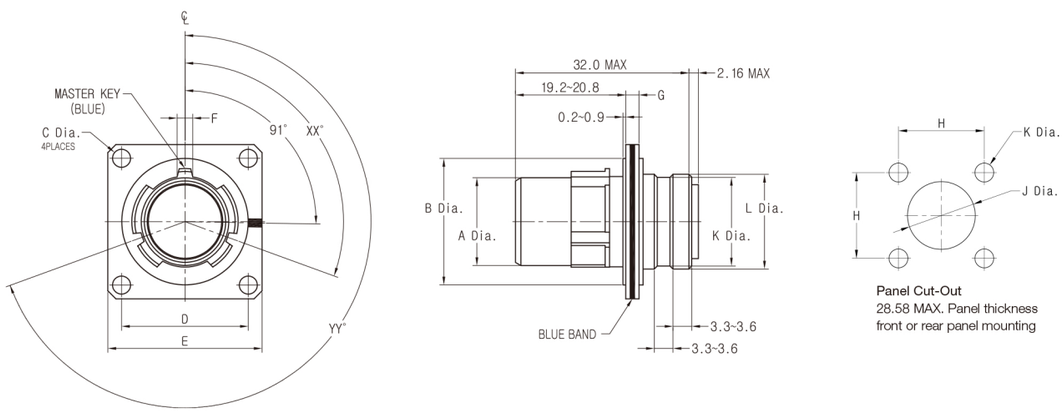

Table 1 : Polarization Chart

Key Position	XX°	YY°
N	110°	250°
A	100°	260°
B	90°	270°
C	80°	280°
D	70°	290°
L	120°	265°
M	120°	275°
R	120°	285°
U	0°	0°

Table 2

Shell Size	Shell Size Code	A Dia.	B Dia.	C Dia.	D BSC	E	F (BSC) Socket	F (BSC) Pin	G	H ±0.13	J Dia. ±0.13	K Dia.	L Dia.	M Dia. ±0.13
11	B	12.93 12.77	20.15 19.76	3.5 3.1	20.62	26.7 25.6	1.90	2.78	2.6 2.1	20.63	20.47	13.6 13.2	14.7 14.3	3.25
13	C	16.10 15.93	23.35 22.96	3.5 3.1	23.02	29.1 28.0	1.94	2.85	2.6 2.1	23.01	23.67	16.5 16.1	17.6 17.2	3.25
15	D	19.28 19.12	26.52 26.13	3.5 3.1	24.62	31.5 30.4	2.43	3.36	2.6 2.1	24.61	26.85	19.6 19.2	20.8 20.4	3.25
17	E	22.48 22.32	29.72 29.33	3.5 3.1	26.98	33.9 32.8	2.45	3.40	2.6 2.1	26.98	30.05	22.8 22.4	24.0 23.6	3.25
19	F	25.63 25.47	32.87 32.48	3.5 3.1	29.36	37.1 36.0	2.96	3.91	2.6 2.1	29.36	33.20	25.5 25.1	26.7 26.3	3.25
21	G	28.80 28.64	36.05 35.66	3.5 3.1	31.76	40.2 39.1	2.99	3.94	3.4 2.9	31.75	36.37	28.7 28.3	29.8 29.4	3.25
23	H	31.98 31.82	39.22 38.83	4.0 3.6	34.92	43.4 42.3	3.50	4.46	3.4 2.9	34.93	39.55	31.9 31.5	33.0 32.6	3.91

Jam Nut Receptacle (D38999/44)

YH38999/44 Classes “F”, “W”

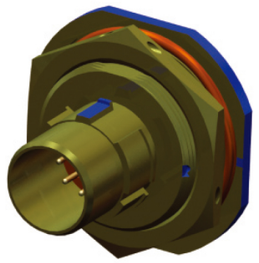

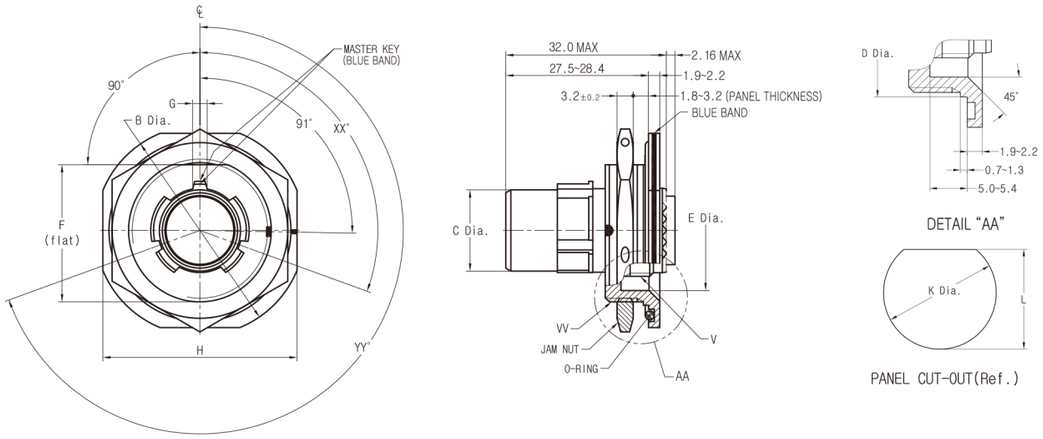

Table 1 : Polarization Chart

Key Position	XX°	YY°
N	110°	250°
A	100°	260°
B	90°	270°
C	80°	280°
D	70°	290°
L	120°	265°
M	120°	275°
R	120°	285°
U	0°	0°

Table 2

Shell Size	Shell Size Code	B Dia.	C Dia.	D Dia.	E Dia.	F Flat	G (BSC) Socket	G (BSC) Pin	H	K Dia. +0.25 -0.00	L +0.00 -0.25	V (THD.)	VV (THD.)	Jam Nut YH38999/28 DASH No.	O-Ring YH3582 DASH No.
11	B	38.6 37.6	12.93 12.77	25.40 25.15	20.42 20.17	23.93 23.74	1.90	2.78	35.4 34.4	25.65	24.26	M15x1.0-6g 0.1R	M25x1.0-6g 0.1R	-3	-024
13	C	41.7 40.7	16.10 15.93	28.58 28.33	23.57 23.32	27.08 26.89	1.94	2.85	38.6 37.6	28.83	27.56	M18x1.0-6g 0.1R	M28x1.0-6g 0.1R	-4	-026
15	D	44.9 43.9	19.28 19.12	31.75 31.50	26.56 26.31	30.26 30.07	2.43	3.36	41.7 40.7	32.01	30.73	M22x1.0-6g 0.1R	M31x1.0-6g 0.1R	-5	-028
17	E	49.7 48.7	22.48 22.32	34.92 34.67	30.02 29.77	33.56 33.37	2.45	3.40	45.7 44.7	35.18	33.91	M25x1.0-6g 0.1R	M34x1.0-6g 0.1R	-7	-029
19	F	51.7 50.7	25.63 25.47	38.10 37.85	32.91 32.66	36.61 36.42	2.96	3.91	48.5 47.5	38.35	37.08	M28x1.0-6g 0.1R	M38x1.0-6g 0.1R	-9	-030
21	G	54.8 53.8	28.80 28.64	41.28 41.03	36.11 35.86	39.78 39.59	2.99	3.94	51.7 50.7	41.53	40.26	M31x1.0-6g 0.1R	M41x1.0-6g 0.1R	-10	-031
23	H	58.0 57.0	31.98 31.82	44.45 44.20	39.26 39.01	42.96 42.77	3.50	4.46	54.8 53.8	44.70	43.42	M34x1.0-6g 0.1R	M44x1.0-6g 0 .1R	-11	-032

Straight Plug(EMI) (D38999/46)

YH38999/46 Classes “F”, “W”

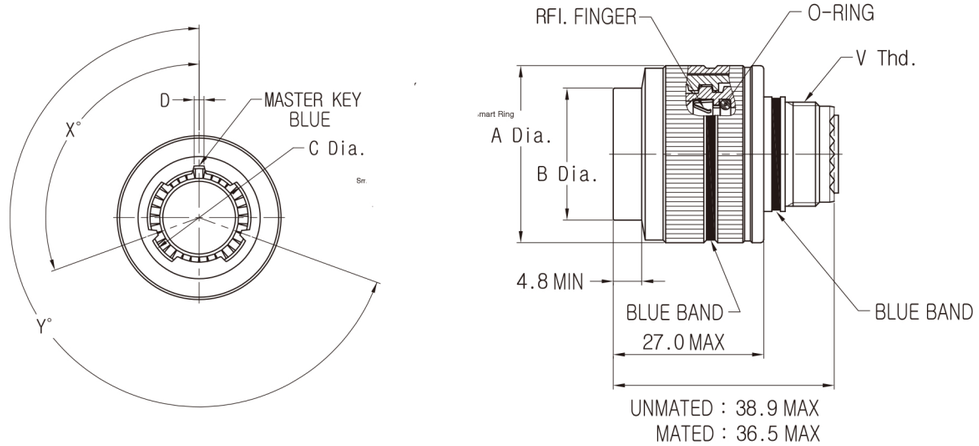

Table 1 : Polarization Chart

Key Position	XX°	YY°
N	110°	250°
A	100°	260°
B	90°	270°
C	80°	280°
D	70°	290°
L	120°	265°
M	120°	275°
R	120°	285°
U	0°	0°

Table 2

Shell Size	Shell Size Code	A Dia. MAX.	B Dia. MAX.	C Dia. BSC	D (BSC) Socket	D (BSC) Pin	V (THD.)
11	B	26.6	19.7	16.28	2.84	1.82	M15x1.0-6g 0.1R
13	C	31.0	22.9	19.35	2.87	1.85	M18x1.0-6g 0.1R
15	D	34.2	26.4	22.50	3.37	2.36	M22x1.0-6g 0.1R
17	E	37.4	29.2	25.68			M25x1.0-6g 0.1R
19	F	40.2	32.4	27.71	3.89	2.37	M28x1.0-6g 0.1R
21	G	43.3	35.6	30.88			M31x1.0-6g 0.1R
23	H	46.5	38.8	34.16	4.39	3.37	M34x1.0-6g 0.1R

In-Line Receptacle (D38999/49)

YH38999/49 Classes “F”, “W”

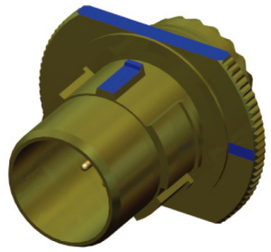

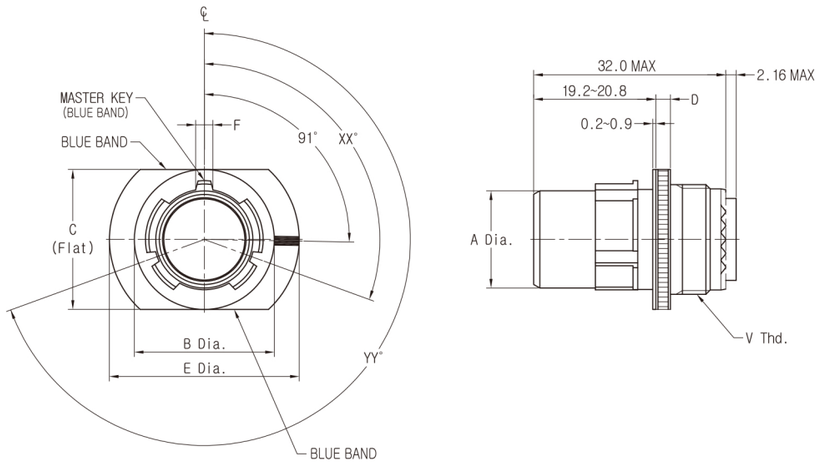

Table 1 : Polarization Chart

Key Position	XX°	YY°
N	110°	250°
A	100°	260°
B	90°	270°
C	80°	280°
D	70°	290°
L	120°	265°
M	120°	275°
R	120°	285°
U	0°	0°

Table 2

Shell Size	Shell Size Code	A Dia.	B Dia.	C Flat	D	E Dia. Max.	F (BSC) Socket	F (BSC) Pin	V (THD.)
11	B	12.93 12.77	20.15 19.76	20.15 19.76	2.6 2.1	26.78	1.90	2.78	M15x1.0-6g 0.1R
13	C	16.10 15.93	23.35 22.96	23.35 22.96	2.6 2.1	31.15	1.94	2.85	M18x1.0-6g 0.1R
15	D	19.28 19.12	26.52 26.13	26.52 26.13	2.6 2.1	34.32	2.43	3.36	M22x1.0-6g 0.1R
17	E	22.48 22.32	29.72 29.33	29.72 29.33	2.6 2.1	37.50	2.45	3.40	M25x1.0-6g 0.1R
19	F	25.63 25.47	32.87 32.48	32.87 32.48	2.6 2.1	40.29	2.96	3.91	M28x1.0-6g 0.1R
21	G	28.80 28.64	36.05 35.66	36.05 35.66	3.4 2.9	43.46	2.99	3.94	M31x1.0-6g 0.1R
23	H	31.98 31.82	39.22 38.83	39.22 38.83	3.4 2.9	46.64	3.50	4.46	M34x1.0-6g 0.1R

연합정밀주식회사
YEONHAB PRECISION CO., LTD.

QPL 인증

국방품질경영시스템(국방)

AS 9100(항공)

ISO 14001(환경)

ISO 9001(품질)

DQ마크 인증

본사 (Head Office & Factory)	충남 천안시동남구 목천읍 학수소사길 219-27 TEL: 041-620-3100 FAX: 041-56-5997	#219-27, Haksusosa-Gil, Mockcheon-Eup, Dongnam-Gu, Cheonan City, Chungcheongnam-Do, Republic Of Korea (ZIP CODE: 31227) TEL: +82-(0)41-620-3100 FAX: +82-(0)41-566-5997
국내 사업부 (Sales Department)	TEL: 041-620-1310~9 FAX: 041-620-1320	TEL: +82-(0)41-620-1310~9 FAX: +82-(0)41-620-1320
해외 사업부 (Int'l Business Dept)	TEL: 041-620-3230~5 FAX: 041-620-1320	TEL: +82-(0)41-620-3230~5 FAX: +82-(0)41-620-1320
판교통신연구소 (Pangyo R&D Center)	경기도 성남시 분당구 판교역로 231 에이치스퀘어 S블럭 801호 TEL: 031-8018-4300 FAX: 031-8018-4331	#801 S-block, H-square B/D, #231, Pangyoyeok-ro, Bundang-gu, Seongnam City, gyeonggi-do, Republic Of Korea (ZIP CODE: 13494) TEL: +82-(0)31-8018-4300 FAX: +82-(0)31-8018-4331

www.yeonhab.co.kr webmaster@yeonhab.co.kr