NOTICE OF PROPRIETARY RIGHTS THIS DOCUMENT CONTAINS CONFIDENTIAL DATA, INCLUDING TRADE SECRETS, PROPRIETARY TO TIMES MICROWAVE SYSTEMS. DISCLOSURE OF THIS DATA IS EXPRESSLY CONDITIONED UPON YOUR ASSENT THAT ITS USE IS LIMITED TO USE WITHIN YOUR COMPANY ONLY. ANY OTHER USE IS STRICTLY PROHIBITED WITHOUT THE PRIOR WRITTEN CONSENT OF TIMES MICROWAVE SYSTEMS.

SYM	REVISION DESCRIPTION	DFTM	DATE	APPD	APPD
A	RELEASED FOR PRODUCTION	Joslen	2017/06/26	TZ	2017/06/26
B	Update Drawing	Patrick	2018/05/16	Joslen	2018/05/16
C	ECN-2020-03-001	Monica	2020/03/06	Tony.Z	2020/03/06

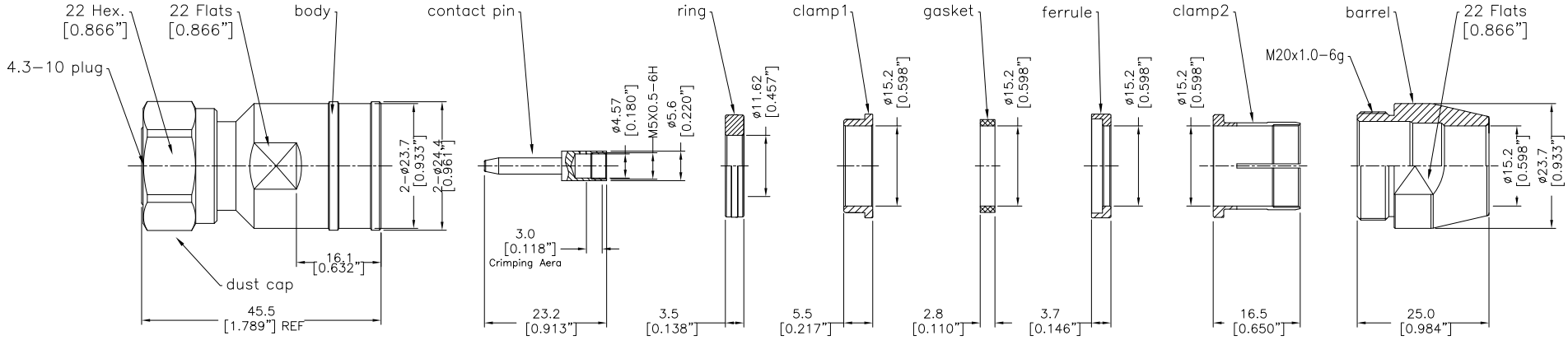

Notes:

1. Centre pin crimp size Hex. 4.83x2.70mm(0.19"x0.11"), Contactpin retention force ≥10 lbs

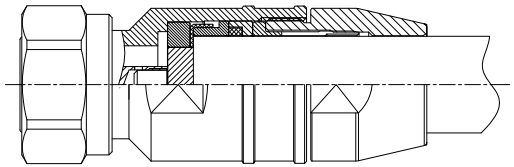

Assembly instruction

I. MATERIALS & FINISHES

Components	Materials	Finishes	Thk. (μ")
Body	Brass	Albaloy	80
Center Cont.	Brass	Silver	200
Insulator	PTFE	--	--
Gasket	Silicone	Red	--
Clamp 1	Brass	Silver	200
Clamp 2	Phosphor Bronze	Albaloy	80
Ring	Brass	Silver	200
Ferrule/Barrel	Brass	Albaloy	80

II. ELECTRICAL PROPERTIES

Impedance (Ω):	50
Frequency Range (GHz):	DC to 6 GHz
Dielectric Withstanding Voltage (V):	2500
Insulation Resistance (MΩ):	≥5000
VSWR:	≤1.30
Insertion Loss(dB, f/GHz):	$-0.1x\sqrt{f}$
Im3 (2x43 dBm)	≤-160dBc

III. ENVIRONMENT PROPERTIES

Temperature Range:	-40°C~+125°C
Thermal Shock:	MIL-STD 202G, Meth.107, Cond. B
Vibration:	MIL-STD 202G, Meth.204, Cond. B
Shock:	MIL-STD 202G, Meth.213, Cond. I
Climatic Class:	IEC 60068 55/155/21
RoHS:	Compliant

IV. MECHANICAL PROPERTIES

Center Cont.:	Crimp/Solder
Outer Cont.:	Clamp
Coupling Nut Torque (N.m):	5
Cbl-Connector Retention Force (N):	500
Durability (cycles):	500

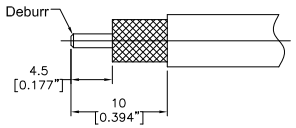

Recommended cable stripping dimensions
Connector adds: 19.4 mm

Compatible with Standard: IEC 61169-54

MATL:	UNLESS OTHERWISE SPECIFIED		DFTM.	Joslen	TIMES MICROWAVE SYSTEMS An Amphenol Company
	ALL DIMENSIONS ARE IN mm MACHINED SURFACES FINISH 1.6 RMS MAX. REMOVE ALL BURRS 0.15X45° MAX. BREAK MACHINE CORNERS 0.15X45° D MAX. FILLET R. TOLERANCES ON DECIMALS .X ±0.3 .XX ±0.15 ANGLES ±2° FRACTIONS ± N/A		DATE	2017/06/26	
			CHKD	KG	TCP-600-4310MC-LP
			DATE	2017/06/26	4.3-10 Male (Plug) Field Installable Straight Connector for TCOM-600 Cable
USED ON: O			APPD	TZ	
SCALE: N/A	DWG SIZE A4	DO NOT SCALE DRAWING	CODE IDENT 68999	DATE 2017/06/26	SHT 1 OF 1 — 3190-6392 — REV C